117-2184-90

APPLICATION		
NEXT ASS'Y	USED ON	VAR

REVISIONS					
ZONE	REV	DESCRIPTION	ECN	DATE	APP'D
	D	REVISED PER ECN	5185	8/18/94	DM 8/19/94

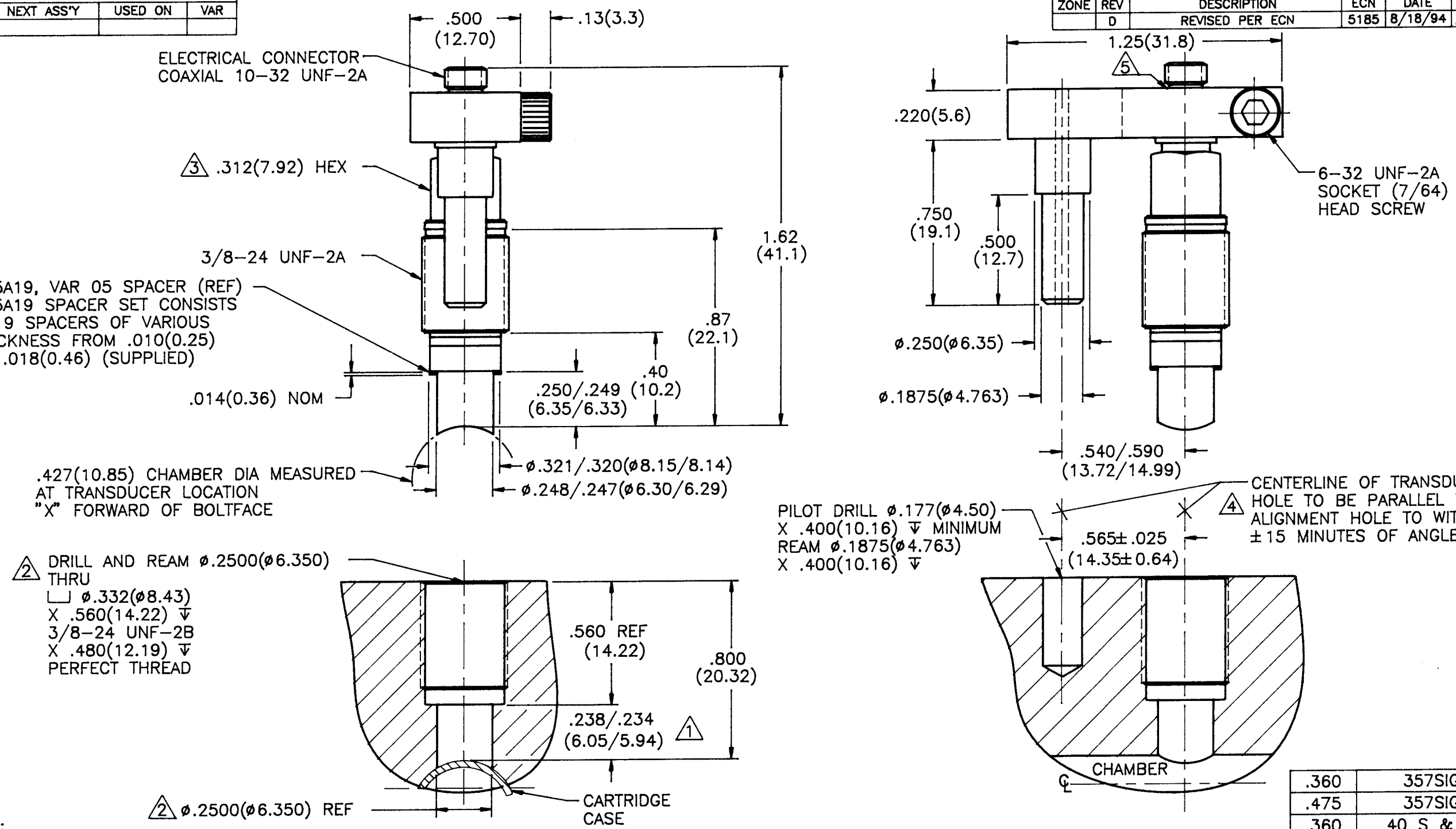

.360	357SIG
.475	357SIG
.360	40 S & W
.424	10 MM AUTO
"X"	CALIBER

NOTES:

5. LOCATE YELLOW DOT TOWARD CASE MOUTH.
4. ALIGNMENT HOLE MAY BE LOCATED EITHER FORE OR AFT OF TRANSDUCER MOUNTING HOLE.
3. MOUNTING TORQUE ON .312(7.92) HEX 5-10 FOOT POUNDS (.69-1.38 METER KILOGRAMS)
2. CENTERLINE OF .2500(6.350) HOLE MUST INTERSECT CENTERLINE OF CHAMBER BORE WITHIN .001(.03)
1. HOLD THIS DIMENSION TO OBTAIN FLUSH MOUNT.

UNLESS SPECIFIED TOLERANCES	
DIMENSIONS IN INCHES	DIMENSIONS IN MILLIMETERS (IN PARENTHESIS)
DECIMALS XX ±.01 XXX ±.005	DECIMALS X ±0.3 XX ±0.13
ANGLES ±2 DEGREES	ANGLES ±2 DEGREES
FILLETS AND RADII .003 - .005 (0.07 - 0.13)	

DRAWN	JRL	8/18/94	MFG	RJA	8/22/94
CHK'D	DM	8/19/94	ENGR	JOR	8/19/94
APP'D	ACT	8-21-94			

TITLE INSTALLATION DRAWING MODEL 117B184 CONFORMAL BALLISTICS TRANSDUCER

PCB PIEZOTRONICS, INC.
3425 WALDEN AVE. DEPEW, NEW YORK 14043
PHONE: (716) 684-0001

CODE IDENT. NO. 52681 | DWG. NO. 117-2184-90

SCALE: 2X | SHEET 1 OF 1