INSTRUCTION MANUAL

himac
EPPENDORF GROUP

ROTORS, TUBES, BOTTLES AND CAPS

FOR Ultracentrifuge

This manual contains instruction for operation of Angle rotor, Neo-angle rotor, Swing rotor and Vertical rotor. Carefully read this manual in conjunction with manual for centrifuge and use the rotor correctly. Retain it for future reference after reading.

2022.10
S99920422
Original instruction manual

○ The contents in this manual are subject to change for improvement.

Copyright © 2022 Eppendorf Himac Technologies Co., Ltd.
All rights reserved. No part of this document may be reproduced or transmitted in any form or any means without permission from Eppendorf Himac Technologies Co., Ltd.
The names of actual companies and products mentioned herein may be the trademarks of their respective owners.

ABOUT ⚠ MARKS

In this manual, ⚠ marks are used to make attention, to prevent personal injury or machine damage. The meaning of the mark is as follows.

⚠ WARNING :	Indicates a potentially hazardous situation which, if not avoided, could result in severe personal injury or possible death.
⚠ CAUTION :	Indicates a hazardous situation which, if not avoided, could result in personal injury, or severe damage to the instrument.

SAFETY REMINDER

Centrifuge rotors rotating at high speed have considerable potential for damage to personal properties if used improperly. For safe and proper use of this rotor, carefully read the centrifuge instruction manual and this rotor instruction manual before use and observe the instructions.

⚠ WARNING

- ◆ Never use any sample capable of producing flammable or explosive vapors. Your ultracentrifuge and rotor have no explosion-proof construction.
- ◆ Your ultracentrifuge and rotor are not designed to confine any sample particles dispersed due to a leakage. Therefore, when using toxic or radioactive samples or pathogenic or infectious blood samples, take additional precautions to prevent exposure to these materials, (e.g., use of isolated areas).
- ◆ Never exceed the maximum speed of the rotor stamped on it: Exceeding the specified speed could break the rotor, resulting in damage to the ultracentrifuge.
- ◆ Check the chemical resistance chart attached the rotor, and do not use any sample inapplicable to the rotor (including buckets), Using such a sample could corrode the rotor (including buckets).
- ◆ Do not remove the RLM adapter or optical adapter from rotor, or replace it with the adapter of another rotor. The adapter is a critical component that detects the over-speed of rotor: If an adapter that is not compatible with the rotor is attached, the rotor could break, resulting in damage to the ultracentrifuge.
- ◆ Do not allow the rotor temperature to rise above 100℃ : This would cause the material to become brittle.
- ◆ Never autoclave the rotor or sterilize it in boiling water: The strength of rotor may be significantly lost.
- ◆ When using swing rotor, be sure to set all buckets of the same type whether or not samples are put in buckets: Failure to do so could not only cause the rotor to vibrate, but could result in the rotor being deformed and the buckets becoming detached, which is very dangerous. Never use buckets made by other companies, or any other type of bucket that is not exclusively made for the rotor even if it is made by us.
- ◆ If the centrifuge, rotor, or an accessory is contaminated by samples that toxic or radioactive, or blood samples that pathogenic or infectious, be sure to decontaminate the item according to good laboratory procedures and methods.
- ◆ If there is a possibility that the centrifuge, rotor, or an accessory is contaminated by samples that might impair human health (for example, samples that are toxic or radioactive, or blood samples that are pathogenic or infectious), it is your responsibility to sterilize or decontaminate the centrifuge, rotor, or the accessory properly before requesting repairs from an authorized sales or service representative.
- ◆ It is your responsibility to sterilize and/or decontaminate the centrifuge, rotor, or parts properly before returning them to an authorized sales or service representative.

⚠ CAUTION

- ◆ Check the chemical resistance chart in separate manual, and do not use any sample inapplicable to the tubes, the bottles, the tube adapters, or the caps. Using such a sample could deteriorate them.
- ◆ The allowable speed may be lower depending on the density of sample, use of salt-such as cesium chloride-or the combination of tubes and bottles, or tube adapters and caps. Refer to this instruction manual.
- ◆ Always balance the tubes/bottles and samples within the allowable imbalance of rotor, including the tube adapters and caps: Operation with imbalance exceeding the allowable range could damage the ultracentrifuge and rotor.
- ◆ Do not load only one tube or load tubes asymmetrically: Asymmetrical loading may cause imbalance operation and damage the centrifuge and rotor.
- ◆ Clean the inside of drive hole (crown hole) in the rotor and the surface of drive shaft (crown) of centrifuge once a month. If the drive hole or drive shaft is stained or if any foreign matter adheres, the rotor may have been improperly installed and could come off during operation.
- ◆ Do not use tubes/bottles that have exceeded their life expectancy. Failure to do so could result in damage of tubes/bottles and the rotor and the centrifuge.

  The life expectancy of tubes/bottles depends on factors such as the characteristics of samples, speed of the rotor used, and temperature.

  Always check for deterioration and damage (cracks, deformation, and so on) on tubes/bottles before using them. Do not use the tubes/ bottles if you find such a problem.
- ◆ Maintain and inspect the rotor each time after using it. If you fine any abnormality in the rotor, stop using it and contact an authorized sales or service representative.

CONTENTS

1. Specification of rotors 1
1.1 Preface 1
1.2 Angle rotors 2
1.3 Neo-angle rotors 3
1.4 Swing rotors 4
1.5 Vertical rotors 5
1.6 Prevention of over-speed 6
1.7 Relation between rotors and ultracentrifuges 7
1.8 Calculation of separation characteristics 9

2. Tubes, bottles and caps 11
2.1 The kind of tubes, bottles and caps 11
2.2 Materials of tubes 13
2.3 Washing 13
2.4 Sterilization 14
2.5 Storage 15
2.6 Inspection 15
2.7 Life 16
2.8 How to use tubes and bottles 17
● Tubes, 5mL and over, for angle rotors and vertical rotors 17
● Tubes, 4mL or less, for angle rotors 21
● Tubes (12PA/12PE/40PA/40PE tubes) that are applicable for S-Cap 23
● Bottles 27
● Seal tubes 28
● Thick-walled tubes for angle rotors 30
● Tubes for swing rotors 31
2.9 How to balance 32

3. How to use rotors 33
3.1 Allowable rotor speeds 33
3.2 Sample limitation 34
3.3 Adhesion of sample, etc. 34
3.4 Angle rotors 35
3.5 Swing rotors 37
3.6 Neo-angle rotors and titanium vertical rotors 42

4. Maintenance 45
4.1 Anti-corrosion property 45
4.2 Maintenance of rotors 45
4.3 Sterilizing rotors 47
4.4 Inspection of rotors 47
4.5 Replacing optical adapter/disk 48
4.6 Life of rotors 51

5. Troubleshooting 52
5.1 Rotors 52
5.2 Tubes 53

Appendix 1 The list of caps for tubes 55
Appendix 2 The list of S-Series Cap and tools 57
Appendix 3 The list of space caps 59
Appendix 4 Tightening tools of the cap 61
Appendix 5 The list of bottles 62
Appendix 6 The list of tube kits 63

Decontamination 66
Rotor retirement 66

1. Specification of rotors

1.1 Preface

The rotors can be classified into following matters:

(1) Classified into shapes

Angle rotors.....This rotor holds the tubes and bottles at an angle to the axis of rotation. It is mainly used to separate components in a cell using fraction centrifugation (Pelleting) and separate nucleic acid using density gradient sedimentation equilibrium.

Neo-angle rotors.....This rotor holds the tubes at a smaller angle to the axis of rotation than the angle rotors. It is effective to separate samples that produce precipitates and floating matter such as plasmid DNA in a short time.

Swing rotors.....This rotor holds tubes in the bucket and swings the bucket in the centrifugal direction. It is mainly used for high precision separation such as to separate components in a cell using the density gradient sedimentation velocity.

Vertical rotors.....This rotor holds the tubes perpendicularly to the centrifugal force. It is expected for separation in a shorter time with this rotor than with swing rotors and angle rotors. It is specially effective to separate nucleic acid using the density gradient sedimentation equilibrium.

(2) Classified into materials

Titanium rotors·····Rotors made from titanium alloy.

Aluminum rotors ·····Rotors made from aluminum alloy.

(3) Classified into management type

Rotor with optical adapter/disk

·····The rotor's operation history is recorded in the log book for control. An optical adapter/disk is attached as an optical over-speed prevention device.

RLM rotor ·····This is exclusively used with a CP-NX, a CP-WX, a CP-MX, or a CP-α ultra-centrifuge. The rotor life management (RLM) system controls the rotor's operation history automatically. An RLM adapter is attached for magnetic recording.

1.2 Angle rotors

Angle rotors are made from either aluminum alloy or titanium alloy. Table 1-1 shows the specifications of angle rotors and Fig. 1-1 shows the name of parts.

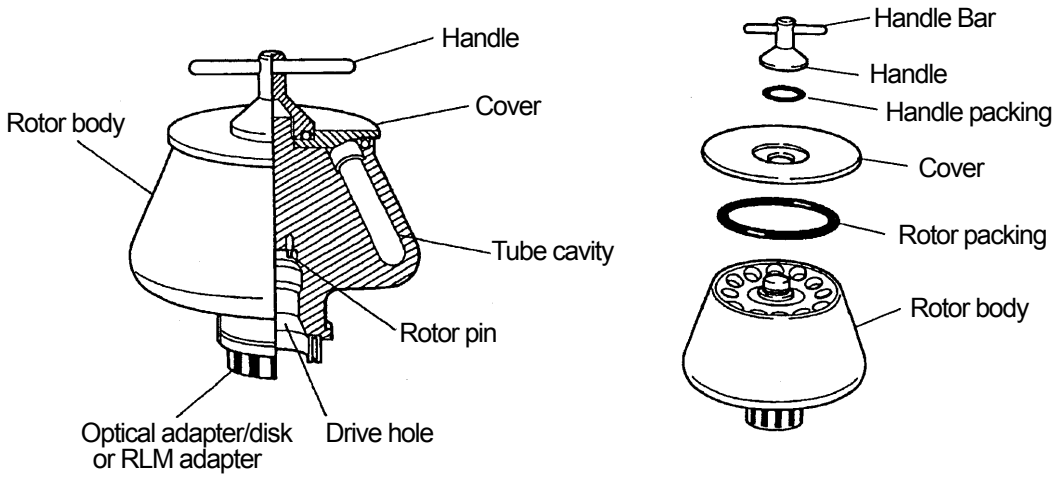

Fig. 1-1 Names of parts of angle rotor

Table 1-1 Specification of angle rotor

Rotor	Maximum Speed (rpm)	Maximum RCF (× g)	K factor	Tube* (Number × mL)	Rotor* capacity (mL)	Weight (kg)	Rotor body material	Cover material
P100AT2	100,000	803,000	18	8 × 6.5 mL	52	3.7	Titanium alloy	Titanium alloy
P90AT	90,000	700,000	25	8 × 12 mL	96	4.7	Titanium alloy	Titanium alloy
P80AT	80,000	615,000	27	8 ×12 mL	96	6.0	Titanium alloy	Titanium alloy
P70AT2	70,000	452,000	36	12 × 12 mL	144	6.7	Titanium alloy	Titanium alloy
P70AT	70,000	505,000	44	8 × 40 mL	320	10.0	Titanium alloy	Titanium alloy
P65A	65,000	370,000	48	10 × 12 mL	120	4.1	Aluminum alloy	Aluminum alloy
P50AT4	50,000	316,000	32	44 × 6.5 mL	286	11.1	Titanium alloy	Aluminum alloy
P50AT2	50,000	303,000	70	12 × 40 mL	480	15.6	Titanium alloy	Aluminum alloy
P50A3	50,000	252,000	33	24 × 1.5 mL	36	2.1	Aluminum alloy	Aluminum alloy
P45AT	50,000	235,000	130	6 × 94 mL	564	14.6	Titanium alloy	Aluminum alloy
P42AT	42,000	223,000	12	72 × 0.23 mL	16.6	8.0	Titanium alloy	Aluminum alloy
P32AT	32,000	111,000	186	32 × 12 mL	384	8.8	Titanium alloy	Aluminum alloy
P27A	27,000	106,000	352	6 × 160 mL	960	12.5	Aluminum alloy	Aluminum alloy
P21A2	21,000	71,000	486	6 × 230 mL	1380	11.4	Aluminum alloy	Aluminum alloy

* Nominal capacity

For further details of each rotor, see each rotor instruction manual.

1.3 Neo-angle rotors

Neo-angle rotors are made from titanium alloy. Table 1-2 shows the specifications of neo-angle rotors and Fig. 1-2 shows the name of parts.

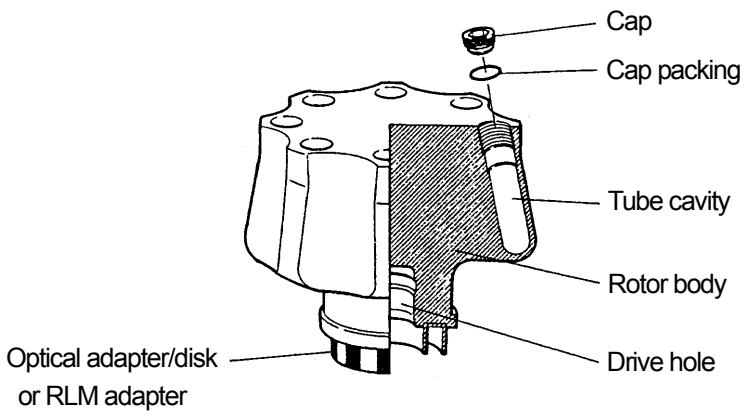

Fig. 1-2 Names of parts of Neo-angle Rotor

Table 1-2 Specification of neo-angle rotor

Rotor	Maximum Speed (rpm)	Maximum RCF (× g)	K factor	Tube* (Number × mL)	Rotor* capacity (mL)	Weight (kg)	Rotor body material	Cap material
P90NT	90,000	646,000	10	8 × 5 mL	40	4.9	Titanium alloy	Aluminum alloy
P65NT	65,000	402,000	23	10 × 12 mL	120	9.6	Titanium alloy	Aluminum alloy
P65NT2	65,000	431,000	15	18 × 5 mL	90	8.7	Titanium alloy	Aluminum alloy

* Nominal capacity

For further details of each rotor, see each rotor instruction manual.

1.4 Swing rotors

There are three types of swing rotors depending on buckets types (hook type buckets, pin type buckets (only P65ST), and top loading type buckets (P32ST and P32ST2)). Table 1-3 shows the specifications of swing rotors and Fig. 1-3 shows the name of parts.

●Swing rotors (hook type buckets and pin type buckets) other than the P32ST rotor and the P32ST2 rotor

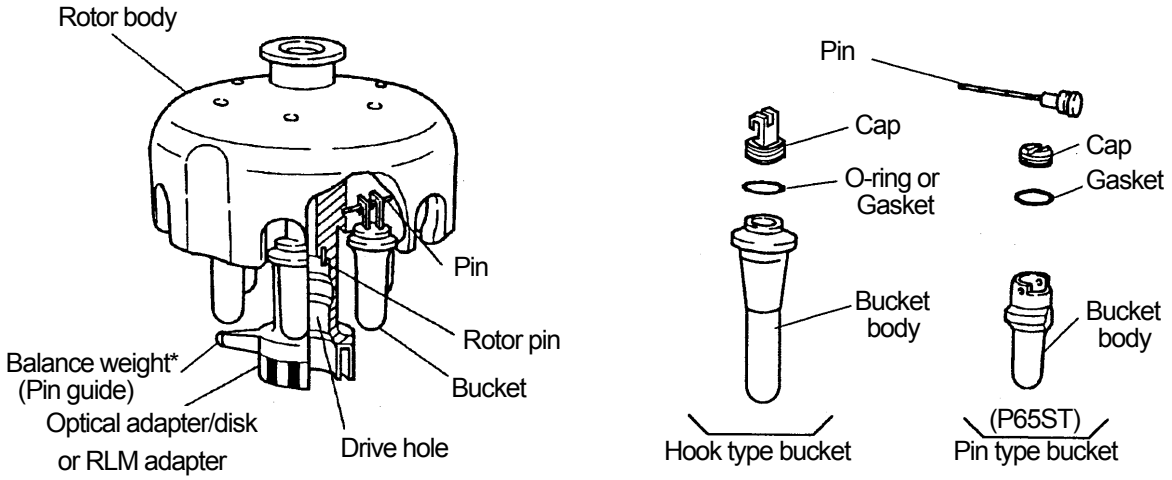

* Some rotors do not have a rotor pin and a balance weight.
An old rotor may have a pin guide in place of a balance weight.

●P32ST rotor and P32ST2 rotor (top loading type buckets)

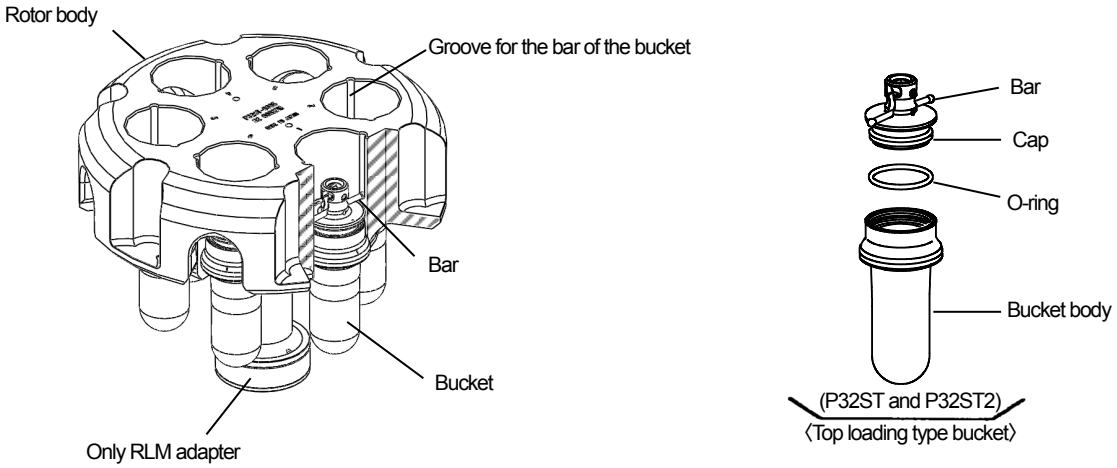

Fig. 1-3 Names of parts of swing rotor

Table 1-3 Specification of swing rotor

Rotor	Maximum Speed (rpm)	Maximum RCF (× g)	K factor	Tube* (Number ×mL)	Rotor* capacity (mL)	Weight (kg)	Rotor body material	Bucket material
P65ST	65,000	419,000	48	3 × 5 mL	15	4.3	Titanium alloy	Titanium alloy
P56ST	56,000	409,000	54	6 × 4 mL	24	5.2	Titanium alloy	Titanium alloy
P55ST2	55,000	366,000	50	6 × 5 mL	30	5.5	Titanium alloy	Titanium alloy
P40ST	40,000	284,000	139	6 × 13 mL	78	6.9	Titanium alloy	Titanium alloy
P32ST2	32,000	193,000	216	6 × 16 mL	96	7.2	Titanium alloy	Titanium alloy
P32ST	32,000	180,000	198	6 × 40 mL	240	7.1	Titanium alloy	Titanium alloy
P28S	28,000	141,000	252	6 × 40 mL	240	6.2	Aluminum alloy	Titanium alloy

* Nominal capacity

For further details of each rotor, see each rotor instruction manual.

1.5 Vertical rotors

Vertical rotors are made from titanium alloy. Table 1-4 shows the specifications of vertical rotors and Fig. 1-4 shows the name of parts.

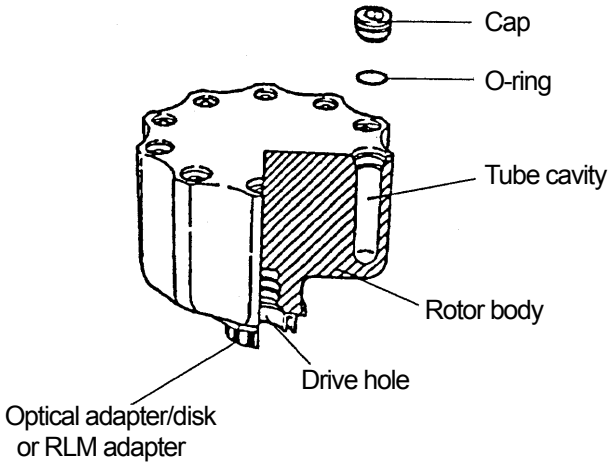

Fig. 1-4 Names of parts of vertical rotor

Table 1-4 Specification of vertical rotor

Rotor	Maximum Speed (rpm)	Maximum RCF (× g)	K factor	Tube* (Number × mL)	Rotor* capacity (mL)	Weight (kg)	Rotor body material	Cap or adapter material
P100VT	100,000	700,000	6	8 × 5 mL	40	4.1	Titanium alloy	Aluminum alloy
P65VT3	65,000	402,000	13	10 × 12 mL	120	10.1	Titanium alloy	Aluminum alloy
P65VT2	65,000	416,000	10	16 × 5 mL	80	9.5	Titanium alloy	Aluminum alloy
P50VT2	50,000	243,000	36	8 × 40 mL	320	11.9	Titanium alloy	Aluminum alloy

* Nominal capacity

For further details of each rotor, see each rotor instruction manual.

1.6 Prevention of over-speed

If the rotor speed exceeds the maximum limit, the rotor might break, leading to a serious accident. The RLM adapter or optical adapter/disk fitted at the bottom of the rotor prevents overspeed of the rotor.

⚠ WARNING : Do not remove the RLM adapter or optical adapter from rotor, or replace it with the adapter for another rotor.
The adapter is a critical component that detects the over-speed of rotor: If an adapter that is not compatible with the rotor is attached, the rotor could break, resulting in damage to the ultracentrifuge.

⚠ CAUTION :
- Do not bring the RLM adapter near a magnet, or scratch it: Doing so will erase the memory stored in adapter, and make the rotor unusable. To prevent the adapter from being scratched, store the rotor with RLM adapter, using the stand provided with the rotor (rotor stand for protecting adapter). If the adapter is scratched, immediately stop using the rotor, and contact an authorized sales or service representative.
- Take great care not to scratch the optical adapter : Any scratch on adapter will make the rotor unusable. To prevent the adapter from being scratched, store the rotor with optical adapter, using the stand provided with the rotor (rotor stand for protecting adapter). If the adapter is scratched, immediately stop using the rotor, and contact an authorized sales or service representative.
- If foreign matter adheres to the RLM adapter or optical adapter/disk, wipe it off promptly. Otherwise, the RLM adapter or optical adapter/disk may be corroded.

The RLM adapter of RLM Rotor is a magnetic memory. Use care to protect it from damage, and keep it away from magnetism (otherwise memory contents would be destroyed). To protect the RLM adapter, be sure to keep the RLM Rotor on the rotor stand provided.

The optical adapter/disk of the standard rotor has stripes of black (not reflecting light) and white (reflecting light) as shown in Fig.1-5 and the number of stripes depends on the maximum speed of the rotor.
This adapter/disk keeps the rotor speed under the maximum permissible value.

- See 4.5 Replacing Optical Adapter/Disk for replacing the optical disk.

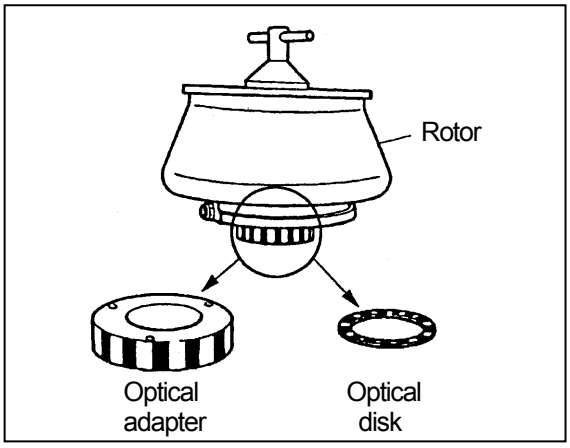

Fig. 1-5 Optical adapter/disk

At model 55PA, 65P and 55P-2, if over speeding occurs, a small pin jumps out from the pin guide and the overspeed preventing system functions to reduce speed.
When using an old type ultracentrifuge, refer to "1.7 Relation between Rotor and Ultracentrifuge".

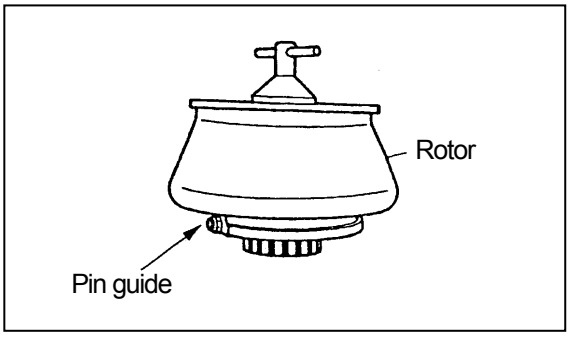

Fig. 1-6

1.7 Relation between rotors and ultracentrifuges

The system to prevent the over speed is different from the system of the present centrifuge. Therefore, usable rotor is limited. Use the proper rotor in accordance with Table 1- 5.

Table 1-5 The relation between Rotor and Ultracentrifuge

Rotor \ Type of Centrifuge	CP NX Series (CP100NX, CP90NX, CP80NX) CP WX Series (CP100WX, CP90WX, CP80WX) CP MX Series (CP100MX, CP80MX, CP70MX) CP α Series (CP100α, CP90α, CP80α)	55P-3,80P,7Series(80P-7 etc.), 72Series(85P-72 etc.), SCP-H Series(SCP85H etc.), SCP-H2 Series(SCP85H2 etc.), CP Series(CP70 etc.), CP56G CP β Series(CP85 β etc.)	55PA 55P-2 65P	55P 40P
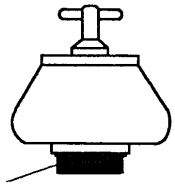 RLM adapter	Note 1) Note 5) △	×	×	×
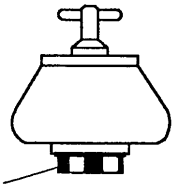 Optical adapter/disk	Note 1) △	○	Note 2) Note 3) Note 4) △	×

○ :Usable △:Refer to the notice × :Impossible to use

Note 1)

Do not use a P21A2 rotor with the centrifuge other than a series of CP-NX/WX/MX ultracentrifuges.

Note 2)

Following rotors shall not be used with the former centrifuge, model 55PA, 55P- 2 or 65P, to use them safely.

P70AT(RP70T), P50AT4(RP50AT4), P50AT2(RP50T- 2), P45AT(RP45T), P65NT2 P65NT(RP65NT), RPV65T, P65VT2(RP65VT2), P65VT3(RP65VT3), P50VT(RPV50T), RPV45T, P50VT2

Note 3)

Following rotors shall not be used with the former centrifuge model 55PA because the rotor chamber of model 55PA is small.

P1 9A(RP19), P40ST(RPS40T), P28S(SRP28SA), P28S2(SRP28SA1)

Note 4)

All of following rotors have the balance weight. In case of using these rotors with the former centrifuge, model 55PA, 55P- 2 or 65P, install the pin guide to the rotor in place of the balance weight.

In case the pin guide is necessary, please buy it.

DO NOT use rotor without pin guide with these centrifuges because it causes danger.

Note5)

The P32ST rotor and the P32ST2 rotor are RLM rotors. They are not rotors with optical adapters/disks. They can be used only in a series of CP-NX/WX/MX ultracentrifuges.

P55AT(RP55T), SRP50AT, RP50T, P50A2(RP50- 2), P42AT(RPL42T), P42A(RP42), RP40- 2, RP40, RP30- 3, P30A2(RP30- 2), RP21 , P19A(RP19), SRP28SA, SRP28SA1 , RPW50T, RPW45, RPW35, P48ZT(RPZ48T), P35ZT(RPZ35T), P32CT(RPC32T)

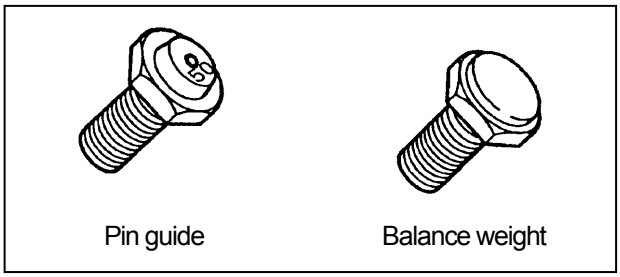

Fig. 1-7 Pin guide and balance weight

- Old rotors with black adapter are used with model 55PA, 55P- 2 or 65P only.

- Old rotors which have no adapter are used with model 40 P or 55P only.

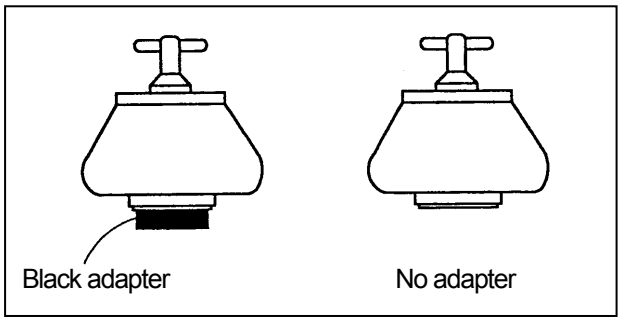

Fig. 1-8

1.8 Calculation of separation characteristics

(1) Relationship between the relative centrifugal force and speed

The relative centrifugal force (RCF) generated by rotation is related to the speed and radial distance from the axis of rotation. The RCF is obtained from the following formula.
(Generally, the RCF is expressed as a ratio of the earth's gravitational acceleration and " × g" is used as the unit.)

$$RCF = 1.118 \times 10^{-5} \times r \times N^2 \ (\times g)$$

N : Speed (rpm)
r : Radial distance from the axis of rotation (cm)

The speed (rpm) can also be calculated from the RCF (× g) using this formula.

(2) To find the separation time

The sedimentation time T required for the particles scattered in the solution to lower from the top (r_t) to the bottom (r_b) of the tube. The sedimentation characteristic is expressed as sedimentation coefficient s but generally the sedimentation coefficient s becomes a very small value and s × 10^{13} may be indicated as S. This S expressed as s × 10^{13} is called the sedimentation coefficient in Svedberg units. However, in biochemistry, etc., it may simply be called the sedimentation coefficient.

$$T(hr) = \frac{10^{13}}{3600 \times s} \cdot \frac{\ln(r_b) - \ln(r_t)}{\omega^2}$$

ω : Angular velocity $\omega = \frac{2\pi}{60} \cdot N$
N : Speed(rpm)
r_t : Distance from axis of rotation to top of solution
r_b : Distance from axis of rotation to bottom of tube

Here, if it is defined that $K = \frac{\ln(r_b) - \ln(r_t)}{\omega^2} \cdot \frac{10^{13}}{3600}$,

$$T(hr) = \frac{K}{S}$$

If S is unknown, the following formula (Stokes' law) is used for calculation.

$$S = \frac{d^2(\rho_2 - \rho_1)}{18\eta} \times 10^{13}$$

d : Diameter of lowering particle (cm)

ρ_1 : Density of solution surrounding particles (g/mL)

ρ_2 : Density of lowering particle (g/mL)

η : Viscosity of solution surrounding particles (Poise)

(The viscosity of water at 20°C is 0.01 Poise)

S in the pure water at 20°C is expressed as $S_{20,w}$.

K is called the K factor (clearing factor) which varies depending of the type of rotor and the speed. When the rotor is used at a certain speed, the K factor (K_N) can be obtained from the formula shown below.

$$K_N = K\left(\frac{N_{max}}{N}\right)^2$$

N : Speed used (rpm)

N_{max} : Maximum speed (rpm)

K_N : K factor at the speed used

K : K factor at the maximum speed

2. Tubes, bottles and caps

2.1 The kind of tubes, bottles and caps

●Tubes and bottles

○Tubes (thin-walled tubes)

For angle rotors or vertical rotors, tubes must be filled up and used with caps. For swing rotors, tubes must be filled to within 3mm from top of tubes and caps are not used. SS tubes and TI tubes can be used with optional volume.

○Thick-walled tubes

Thick-walled tubes are used in angle rotors and swing rotors without caps. For angle rotors, these can be used with optional volume less than net volume. For swing rotors, fill tubes up to within 3mm from the top of tubes with a sample.

○Seal tubes

Seal tubes are heat sealed and used with space caps in angle rotors, neo-angle rotors, vertical rotors, and swing rotors. For some sealed tube and rotor combinations, a float spacer must be set before setting the space cap.

The tube sealer, model STF-1, model STF2, model STF3 and the tube rack are necessary to seal these tubes (see appendix 3).

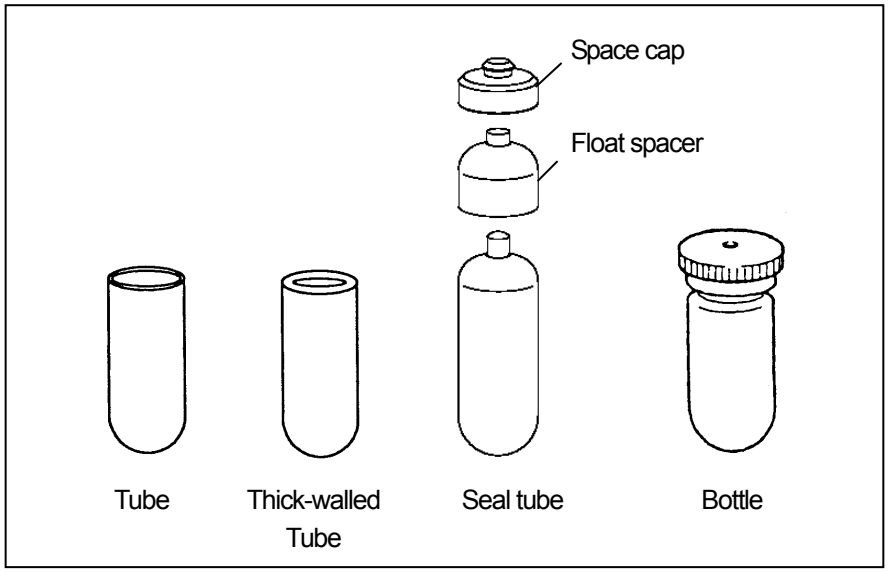

Fig. 2-1

○**Bottles**

A container of the screw cap type is called a bottle. Bottles with inner caps are for high-speed rotation. Bottles with Plastic (polyacetal) screw caps are classified as bottles (B) and those with metal (aluminum alloy) caps are classified as bottles (C). (See Fig.2-2 and appendix 5.)

When a 30PC bottle (C3), 30PC bottle (C), 30PA bottle (C), 70PC bottle (B), 70PC bottle (C), 70PA bottle (C), 80PC bottle (C2) and 80PC bottle (C) are used at more than 100,000 × g (max G-Force), the liquid should be over the shoulder of the bottle. Any volume which does not exceed the net volume is applicable at less than 100,000×g.

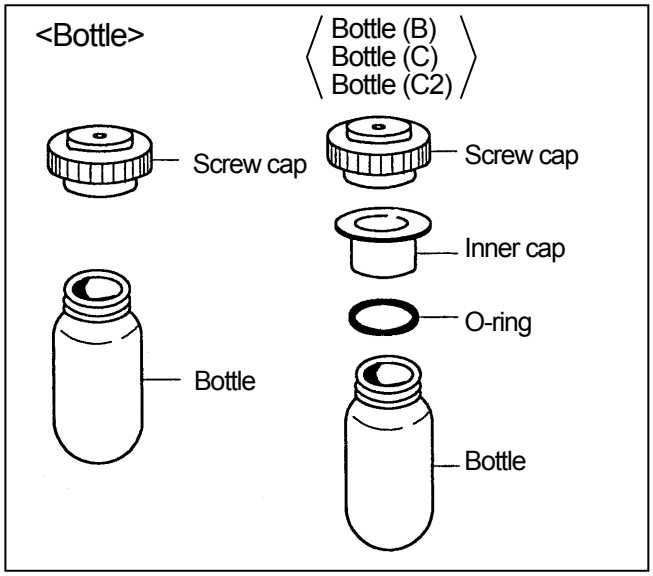

Fig. 2-2 Bottles

●Caps and adapters

○**Caps**

A Cap is used when a thin walled tube is used in an angle rotor or vertical rotor. Be careful that different caps have different assemblies (parts) and materials (see appendix 1). Tightening tools for caps are required (see appendix 4).

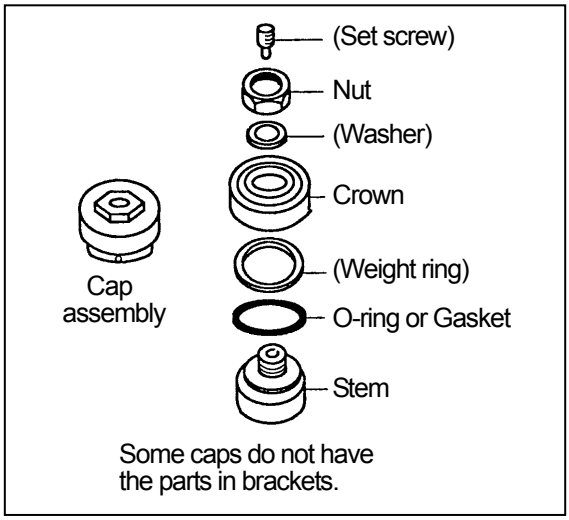

Fig. 2-3 Caps

○**Space caps** (for seal tubes)

Space caps prevent deformation of seal tubes during operation and are made from aluminum alloy or modified polyphenylene ether. Be careful that different rotors use different space caps (see appendix 3).

○**Float spacer** (for some seal tubes)

Float spacers prevent deformation of seal tubes during operation and are made from modified polyphenylene ether. Be sure to use float spacers with space caps. Be careful that different rotors use different float spacers (see appendix 3).

○**Adapters**

Adapters are used when relatively smaller tubes are inserted into the tube cavities. Most adapters are made from white polyacetal. Since the specific gravity of adapters is high, the rotation speed is restricted when adapters are used.

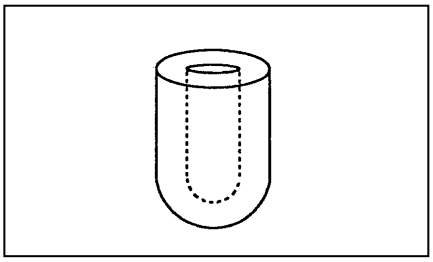

Fig. 2-4 Adapters

2.2 Materials of tubes

⚠ CAUTION : Run the rotor at the proper temperature (see the below). Otherwise the tubes may be damaged or deformed during operation. When running the rotor beyond this limit, test the tube to ensure that there is no abnormality before actual operation.

⚠ CAUTION : Check the chemical resistance chart in separate manual, and do not use any sample inapplicable to the tubes and the bottles.

⚠ CAUTION : Chemical resistance and the strength of tubes/bottles varies with speed, temperature, and so on. Before using sample, fill tubes/bottles with water, buffer solution, etc. instead of sample and run them at the intended speed, temperature, and so on to ensure that there is no abnormality.

PC: Polycarbonate
Strong, transparent and can be autoclaved at 121℃ or less. Use the tubes/bottles at a temperature between 4 ℃ and 25 ℃. Especially weak in organic solution, alkaline solution, and alkaline detergent.

PET: Polyethylene terephthalate
Transparent. Can not be autoclaved. Sliceable and puncturable. Weak in organic solution.
Use the tubes/bottles at a temperature between 4℃ and 20℃.

PE: Polyethylene
Opaque. Can not be autoclaved. Excellent in chemical resistance.
Use the tubes/bottles at a temperature between 4℃ and 20℃.

PP: Polypropylene
Strong but susceptible to low temperature (brittle point: 0℃). It can be autoclaved at 121℃ or less.
Use the tubes/bottles at a temperature between 4℃ and 25℃.

PA: Polypropylene copolymer
Strong and can be autoclaved at 115℃ or less. Use the tubes/bottles at a temperature between 4℃ and 25℃.
(Use a 30PA bottle (C) and 70PA bottle (C) at a temperature between 4℃ and 20℃.)

SST: Stainless steel
Excellent in chemical resistance and heat resistance. . It can be autoclaved at 121℃ or less.

TI : Titanium alloy
Excellent in chemical resistance and heat resistance, and lighter than stainless steel. It can be autoclaved at 121℃ or less.

For sterilization, see Section 2.4 of this manual.

For chemical resistance, see chemical resistance chart in separate manual.

2.3 Washing

1) Wash with tap water or dilute neutral detergent after use.
   If there is a heavy stain, soak in dilute neutral detergent for a while or wash with a soft brush carefully.
2) Rinse with tap water and distilled water.
3) Dry in the air.

The PC tubes and bottles are inferior in chemical resistance with respect to alkaline solution.
Use detergent between pH5 and pH9. And do not allow the soaking in dilute detergent for a long time because otherwise the material would become brittle.

For caps, take to pieces and wash in the same way with tubes. After washing, dry completely and store caps as a unit.

Take care of pH of detergent when performing ultrasonic washing.

- Washing conditions

  Use neutral detergent between pH5 and pH9 and hot water (50°C or less) for cleaning tubes, bottles, caps, and adapters. Ultrasonic washing (pH7) is suitable for cleaning them, too.

- Drying conditions

  Dry tubes, bottles, caps, and adapters in the air.

> ⚠ CAUTION : Use neutral detergent between pH5 and pH9.

2.4 Sterilization

Refer to below for the sterilization of tubes and caps.

●How to autoclave tubes, bottles, and caps

1) Wash tubes and bottle well.
2) Stand it in the heat-resistance rack. Get off screw caps and inner caps of bottles to prevent deforming.
3) After autoclaving, take out tubes and bottles after the temperature in the tank of autoclave lower to room temperature.

Table 2-1 Sterilization conditions

○ : Satisfactory ✕ : Unsatisfactory

Sterilizing condition		Tubes, Bottles							Caps Space caps Crowns				Float spacers	Caps for bottles		Adapter
		PA	PC	PET	PE	PP	TI	SST	AL	TI	SST	m-PPE	m-PPE	Metal caps	Plastic caps O-rings	
Autoclaving	115°C (0.7kg/cm^2) for 30 min.	○	○	✕	✕	○	○	○	○	○	○	○	○	○	○*	○
	121°C (1.0kg/cm^2) for 20 min.	✕	○	✕	✕	○	○	○	○	○	○	○	○	○	○*	○
	126°C (1.4kg/cm^2) for 15 min.	✕	✕	✕	✕	✕	✕	✕	✕	✕	✕	✕	✕	✕	✕	✕
Boiling	15-30 min.	○	○	✕	✕	○	○	○	○	○	○	○	○	○	○	○
Ultraviolet rays	200-300 min	✕	✕	✕	✕	✕	○	○	○	○	○	✕	✕	○	✕	✕
Gas	Ethylene oxide	○	✕	✕	○	○	○	○	○	○	○	✕	✕	○	○	○
	Formaldehyde	○	○	○	○	○	○	✕	○	○	○	○	○	○	○	○
Chemical solution	Ethanol (70%)	○	✕	○	○	○	○	○	○	○	○	○	○	○	○	○
	Hydrogen peroxide (3%)	○	○	○	○	○	○	○	○	○	○	○	○	○	○	✕
	Formalin (3%)	○	○	○	○	○	○	✕	✕	○	✕	○	○	○	○	○

* Green screw caps of bottles - old type - cannot be autoclaved. Blue one can be autoclaved.

2.5 Storage

Store the tubes and caps at room temperature. Do not store at high temperature or humidity or in a chemical vapor or expose to UV radiation.

2.6 Inspection

For tubes, bottles, caps, and float spacers, check for every use and replace cracked, worn or deteriorated one with new one.

[CAPS]

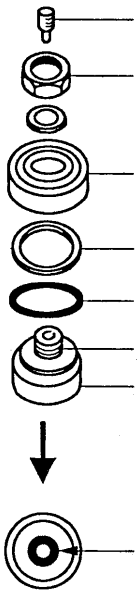

Is the hex hole of the setscrew worn ?

Are the threads of the nut worn or corroded ?

Is the crown corroded or cracked ?

Is the weight ring deformed or corroded ?

Is the O-ring damaged ?

Are the threads of the stem worn ?

Is the stem deformed or corroded ?

When the insert is worn, contact the sales agent. You can see the black insert at the reverse side of the stem.

[TUBES]

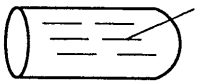

Crack

Do not use the cracked tube.

[SPACE CAPS]

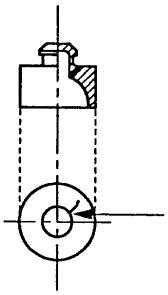

Is there a crack at bottom of the space cap?

Do not use the cracked space cap.

[FLOAT SPACERS]

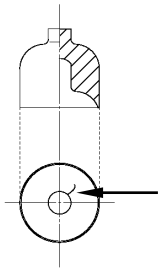

Is there a crack at bottom of the float spacer?

Do not use the cracked float spacer.

2.7 Life

The life of plastic tubes and bottles depend upon the sample, speed of rotor, temperature, etc. The standard life of plastic tubes and bottles is specified as follows :
PET tubes and PA seal tubes are used one time only.

Table 2-2 Standard life of plastic tubes

		Used at * standard condition	Used at 70,000 rpm or Used at over 70,000 rpm	Autoclaving	Used with weak** alkali sample
Tubes	PA, PP	5 times	1 times	5 times	5 times
	PC	5 times	-----	5 times	5 times
	PE	5 times	-----	-----	5 times
Thick-walled tubes Bottles	PA, PP	50 times	-----	50 times	50 times
	PC	20 times	-----	5 times	10 times

* In case they are used repeatedly for 24 hours at the maximum speed of rotors, below 70,000 rpm, with the aqueous sample (between pH5 and pH9).
** pH 7 to pH 9

Tubes capped with S series caps are disposable.
When using 0.9PC thick-walled tubes (Part No. S304296A) with 2S5 adapters (Part No. 336697A), 0.9PC thick-walled tubes are disposable. When using 2S5 adapters with 0.9PC thick-walled tubes, run the rotor at 10°C or less.
The life expectancy of a plastic tube/bottle as the above is an approximate guide. We do not warrant the life expectancies of tubes/bottles.

The cap, space cap, and float spacer are consumable supplies. Their lives vary in different conditions of use. Check for every use and replace cracked, worn or deteriorated one with new one.

⚠ CAUTION : Do not use tubes/bottles that have exceeded their life expectancy. Failure to do so could result in damage of tubes/bottles and the rotor and the centrifuge.
The life expectancy of tubes/bottles depends on factors such as the characteristics of samples, speed of the rotor used, and temperature.
Always check for deterioration and damage (cracks, deformation, and so on) on tubes/bottles before using them. Do not use the tubes/bottles if you find such a problem.

Replace cracked, worn or deteriorated adapter with new one.

2.8 How to use tube and bottles

●Tubes, 5mL and over, for angle rotors and vertical rotors.

Preparation

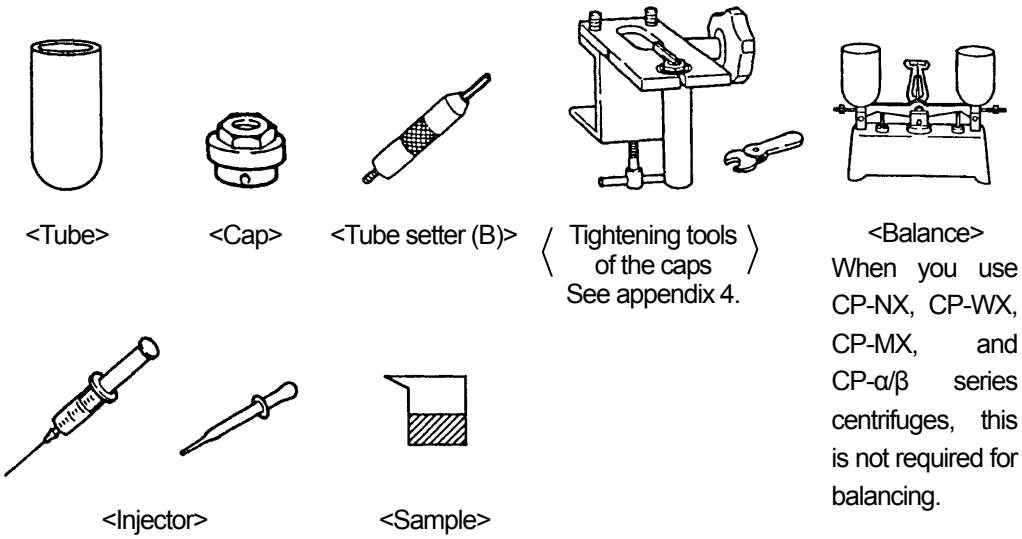

1 Preparing the cap

(1) Confirm the composition of the cap.

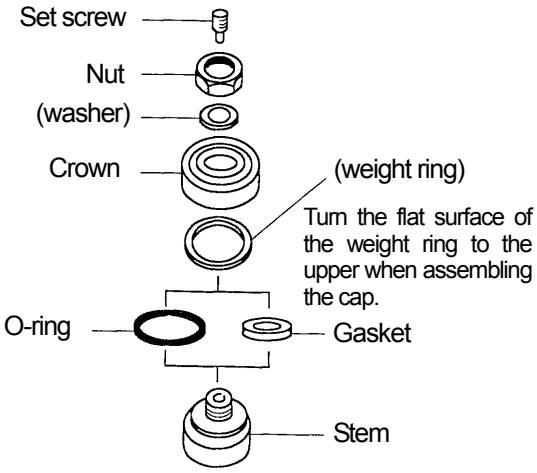

(2) Fix the tube vice to a desk, etc. by turning the handle (B).

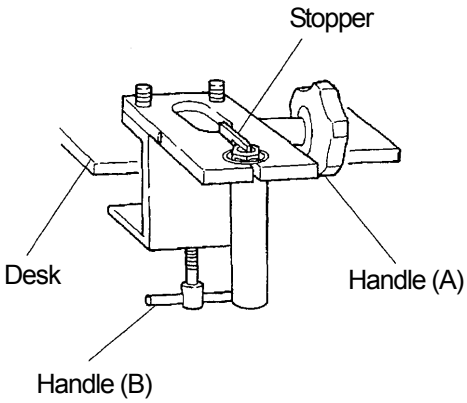

2 Assembling the cap

(1) Assemble the cap loosely.
Unscrew the setscrew.

(2) Fill the tube upto three fourths with the sample, depress the cap until the tube comes in contact with the crown.

(3) Tighten the nut manually.

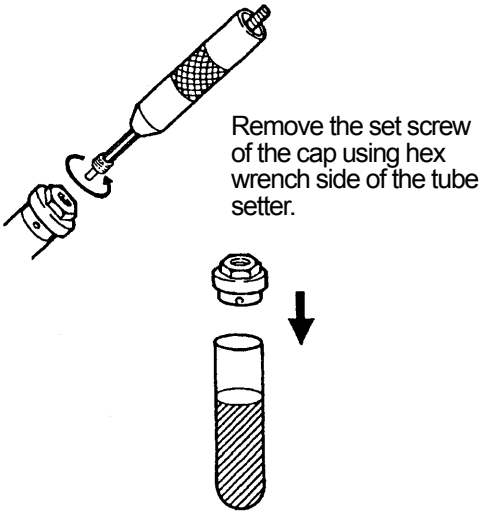

3 Tighten the Cap

(1) Insert the tube and the cap into the hole of the tube vice.
If there is a step between the top surface of the crown and that of tube vise, depress the cap until there is no step between them.

(2) Tighten the handle (A) of the tube vise to fix the tube and cap. When you use the tube vise with the stopper, turn the cap to introduce the stopper into the slit of the stem on the cap.
If you tighten the nut at wrong position, the stopper may be damaged. Examples of correct position and wrong position on setting the stopper are shown in the below figures.

Construction of Cap and Stem

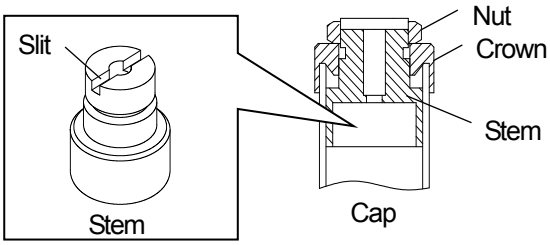

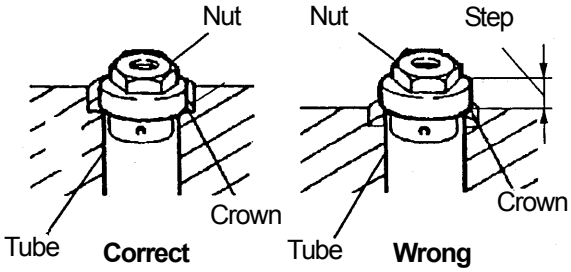

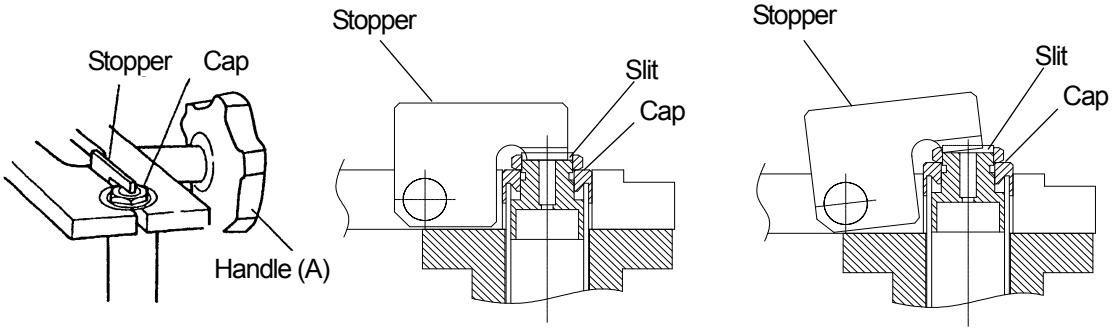

(3) Tighten the nut with a torque wrench or a box wrench.

If using the tube vise with the stopper, tighten the nut with a torque wrench with a clutch as holding down the stopper by your finger.

●Torque wrench with a clutch

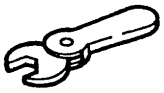

Tighten to function the clutch of the torque wrench.

●Torque wrench

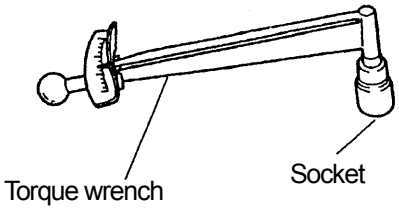

Tighten to a specified tightening torque.

●Box wrench

Tighten the nut securely.

Tightening tools are specified for different caps (see appendix 4).

Table 2- 3 Specified tightening torque

Part No. of cap	Name of cap (Volume of applied tube)	Tightening Torque
339673A	E-T12 Cap (40mL tube)	6 N·m
S305231A	E3-AL Cap (40mL tube)	
S308090A	E4-AL Cap (40mL tube)**	
322690A	F-AL Cap (94 mL tube)	8 N·m
325968A	F2-AL Cap (94 mL tube)	
463577A	C-TI Cap (12 mL tube)	10 N·m
474070A	B2-TI Cap (6.5 mL tube)	
481649A	C2-TI Cap (12 mL tube)	
474272A	E-TI Cap (40 mL tube)	12 N·m

* 1N·m = 10.2kgf·cm

** E4-AL Cap can be used only for a 40PE tube.

(4) Loose the handle (A) of the tube vice, and remove the tube with the tube setter.

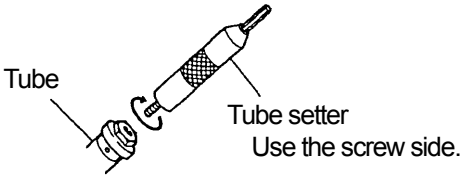

4 Balancing

(1) Fill up the sample with the injector, etc.

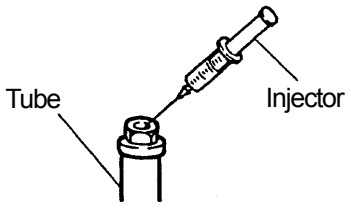

(2) Keep the difference of any two tubes which are arranged symmetrically within 0.3g. See 2.9. How to balance.

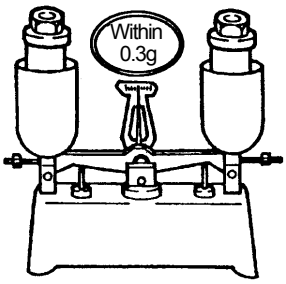

When using CP-NX, CP-WX, CP-MX, and CP-α/β series centrifuges, you can balance the tubes simply by leveling the sample.

(3) Tighten the setscrew securely with the tube setter.

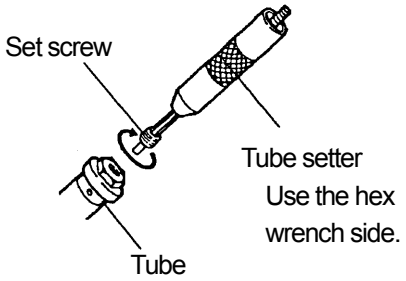

Tighten the setscrew to prevent the leakage of the sample.

●Tubes, 4mL or less, for angle rotors

Preparation

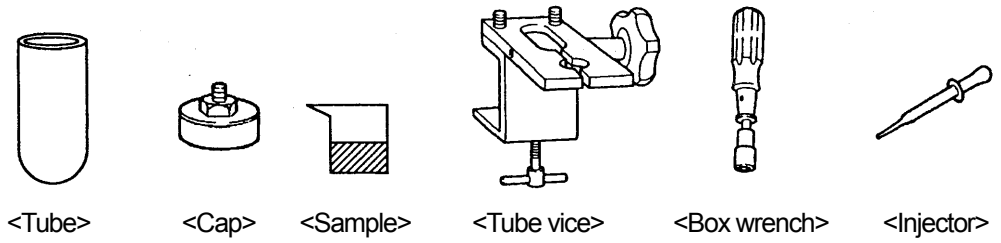

1 Preparing the cap

(1) Confirm the composition of the cap.

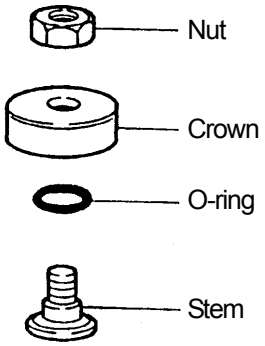

(2) Fix the tube vice to the desk, etc. by turning the handle (B).

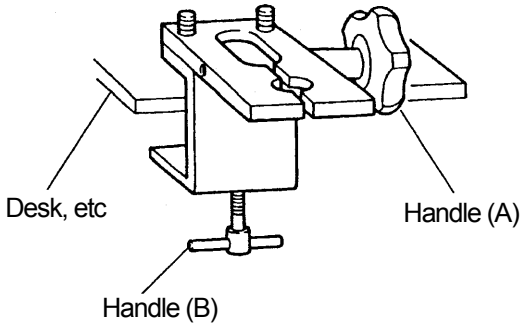

2 Preparing the tube

Fill the tube upto 5mm from the top of the tube with the sample.

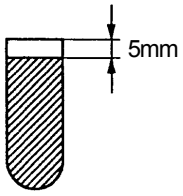

3 Assembling the cap

Match the marks of the stem and the crown and screw the nut by hand.

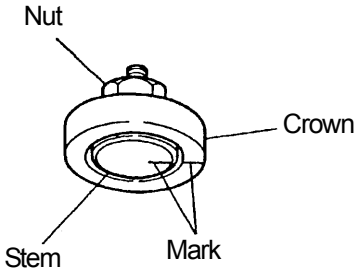

4 Balancing

Put the tube and the cap in the balance, keep the difference of any two tubes which are arranged symmetrically with in 0.3g. When using CP-NX, CP-WX, CP-MX, and CP-α/β series centrifuges, you can balance the tubes simply by leveling the sample.

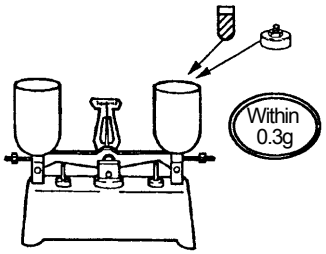

5 Fitting the cap

(1) Fit the cap to the tube depressing the cap until the tube comes in contact with the crown.

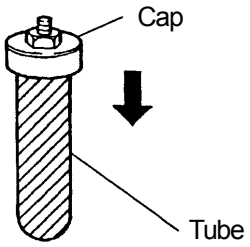

(2) Tighten the nut of the cap with the box wrench.

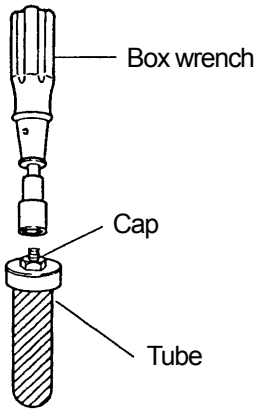

6 Tighten the Cap

(1) Insert the tube and the cap into the hole of the tube vice and fix them.

(2) Tighten the nut of the cap securely with the box wrench. If tightening is not securely, leakage will occur.

(3) Remove the tube from the tube vice.

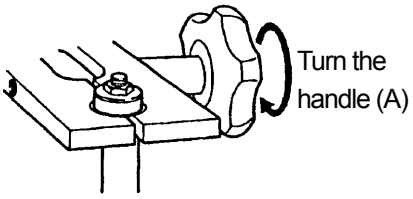

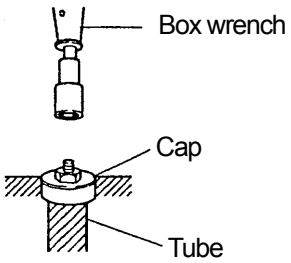

●Tubes (12PA/12PE/40PA/40PE tubes) that are applicable for S-Cap

S-Caps are applicable for P90AT, P80AT, P70AT2,P70AT, P50AT2 angle rotor. For more details, see the instruction manual (Part No. S999884) of S-caps.

⚠ CAUTION:
- If there is any abnormality such as corrosion, stop use of the S-Cap and contact an authorized sales or service representative.
- NY Insert (Part No. :S401791A) are consumable parts. It is necessary to replace it with the new one if it is worn. Contact an authorized sales or service representative when replacing it.

Preparation

<Tube>

<Cap>

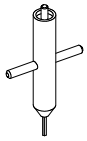

<Tube Setter>

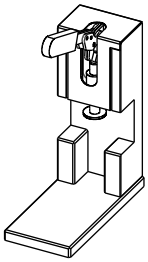

<Hand Press>

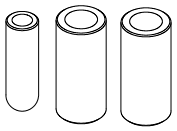

<Tube Holder>

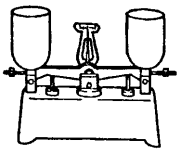

<Balance>

When you use CP-NX, CP-WX, CP-MX, and CP-α/β series centrifuges, this is not required for balancing.

<Injector>

Example)

Injector whose diameter is 1.5 mm.

<Sample>

1 Preparing the caps and adapters

① Confirm the composition of the cap.

For about how to inspect the cap, refer to the instruction manual attached to the centrifuge or the rotor.

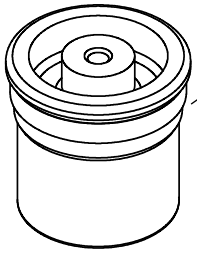

Al Stem
NY Insert is inside Stem.
Check that NY Insert is not worn.

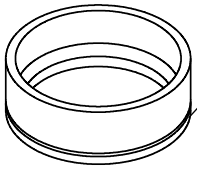

Ti Ring
Set it for the correct direction.
The groove of the ring should be set downward.

② Select the S-Cap, Tool Set , and Tube Holder according to the kinds of tubes.

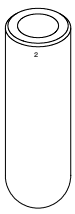

Tube Holder C
(For 12 mL Tube)

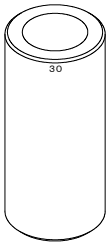

Tube Holder D
(For 30 mL Tube)

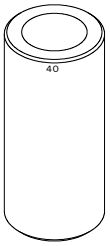

Tube Holder E
(For 40 mL Tube)

Use the Tube Holder C inserted in Tube Holder E.

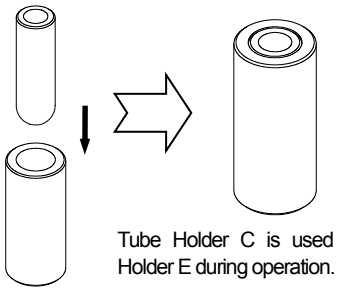

Tube Holder C is used with Tube Holder E during operation.

2 ·Depressing the Al Stem

① Remove the setscrew from the Al Stem.

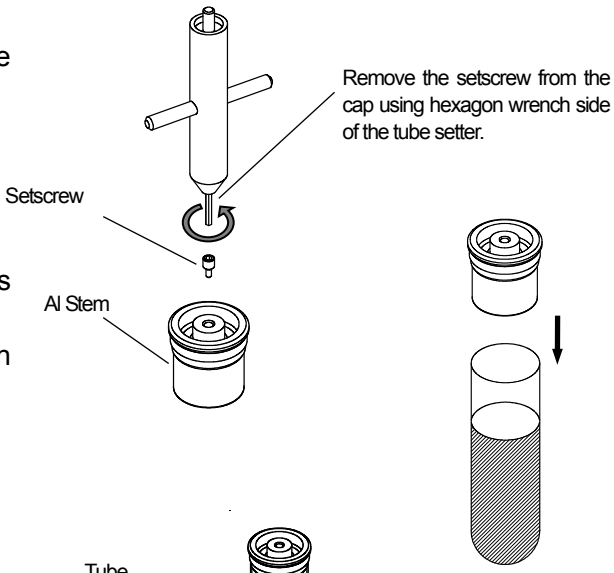

② Fill the tube up to three fourths with the sample.
Place the Al Stem on the mouth of the tube.

③Set the tube in the Tube Holder.

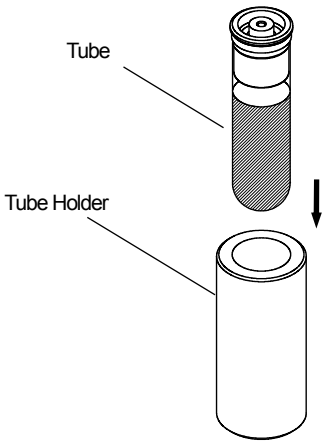

③ Place the Tube Holder on the suitable position of the Hand Press. Then push down the Handle to depress the Al Stem to the desirable position.

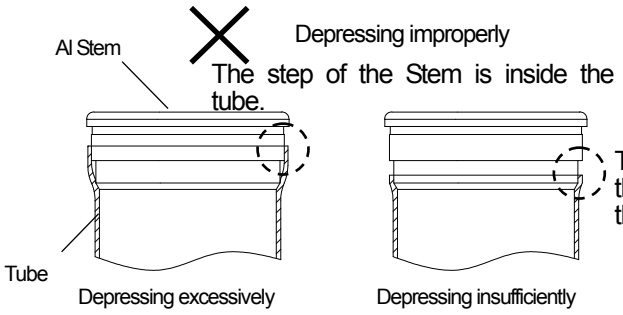

There is a gap between the step of the Stem and the mouth of the tube.

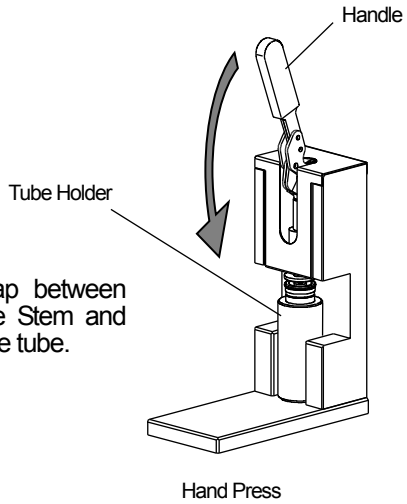

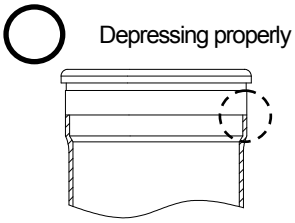

Depress the Al Stem until the step of the Stem fit on the mouth of the tube.

3 Depressing the Ti Ring

① Remove the tube with the Al Stem from the Tube Holder.
Then mount the Ti Ring on the tube from the bottom of the tube with the groove of the ring facing downward.

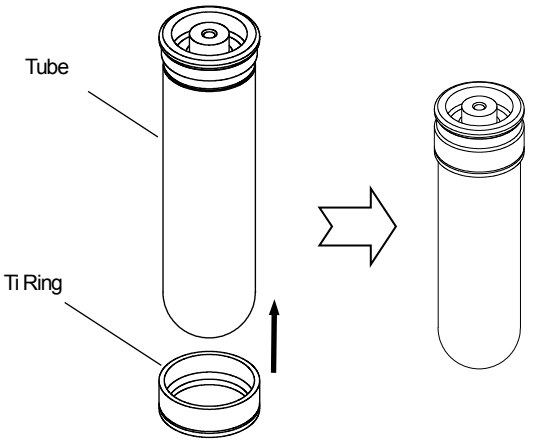

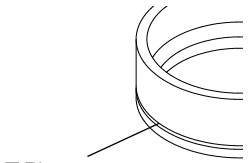

The groove of the ring should be set downward.

② Set the tube as the above ① to the Tube Holder.

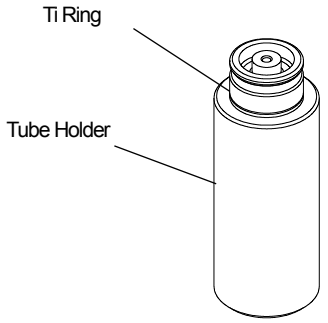

③ Place the Tube Holder on the suitable position of the Hand Press. Then push down the Handle until the Ti Ring contacts the step of the Al Stem.

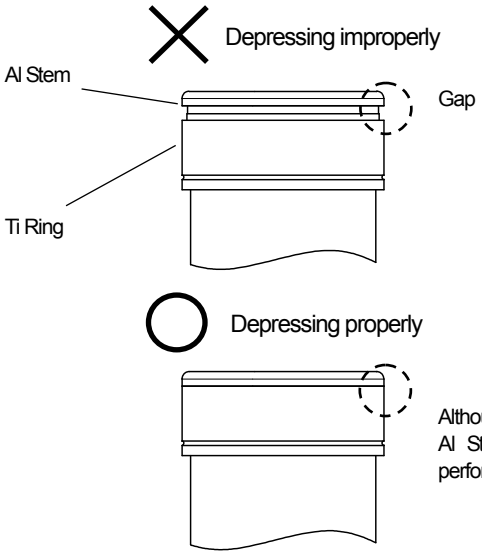

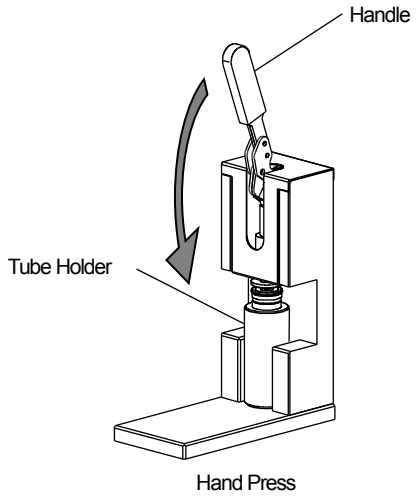

Although there may be about 0.5mm gap between the Al Stem and the Ti Ring, there is no problem in performance for the tube seal.

4 Balancing

① Fill up the tube with the sample by using the injector etc.
Otherwise the tube may be deformed during operation.

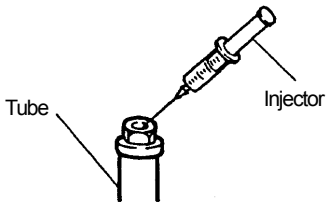

② Put the tube and setscrew in the Balance. Keep the difference of any two tubes which are arranged symmetrically within 0.3g.

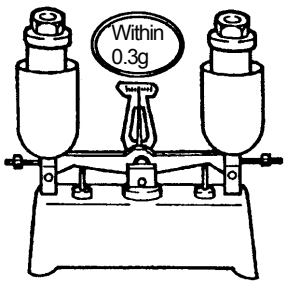

When using CP-NX, CP-WX, CP-MX, and CP-α/β series centrifuges, you can balance the tubes simply by leveling the sample.

③ Tighten the setscrew securely with the tube setter.

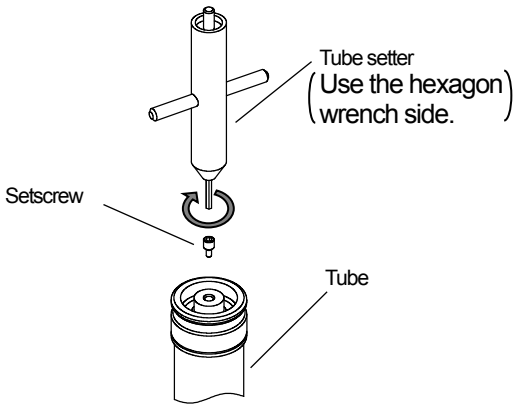

Tighten the setscrew to prevent the leakage of the sample.

●Bottles

Preparation

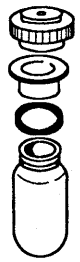

<Bottle>

<Injector>

<Sample>

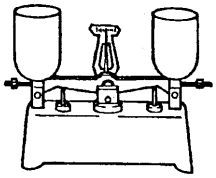

<Balance>

When you use CP-NX, CP-WX, CP-MX, and CP-α/β series centrifuges, this is not required for balancing.

1 Filling the sample

Fill the bottle with the sample.

When a 30PC bottle (C3), 30PC bottle (C), 30PA bottle (C), 70PC bottle (B), 70PC bottle (C), 70PA bottle (C), 80PC bottle (C2), or 80PC bottle (C) are used at 100,000 x g or more (max. G-Force), the liquid should be over the shoulder of the bottle. Any volume which does not exceed the net volume is applicable at less than 100,000xg.

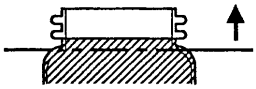

2 Balancing

Put the bottle and the cap in the balance, keep the difference of any two bottles which are arranged symmetrically within 0.3g.

When using CP-NX, CP-WX, CP-MX, and CP-α/β series centrifuges, you can balance the tubes simply by leveling the sample within 5mm.

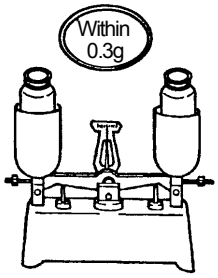

NOTE: Although you balanced the bottles within the approximate allowable imbalance (5mm), alarm message “IMBALANCE” might appear. Balance bottles more accurately again if the alarm message “IMBALANCE” appears (see the rotor instruction manual).

3 Tightening the cap

Fit the cap to the bottle and tighten the cap securely by hand.

●Seal tubes

Preparation

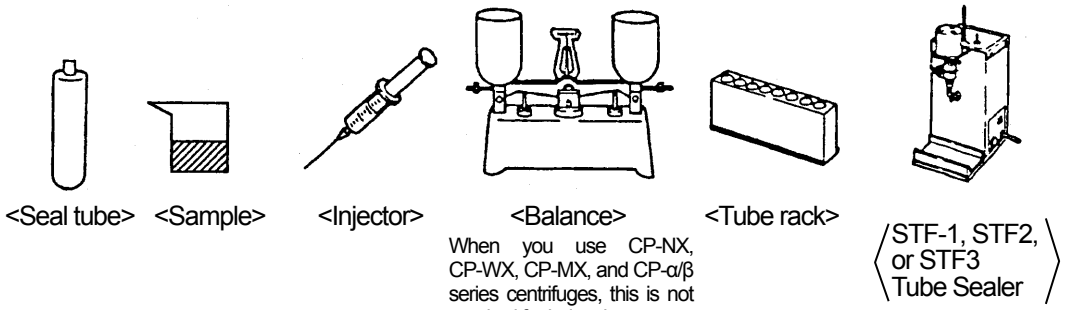

1 Filling the sample

Fill the samples of the same density into the tubes with an injector so a small quantity of bubbles remains. If the volume of the sample is small or the tubes are not welded completely, leakage will occur from the shoulder part or the tube may be deformed.

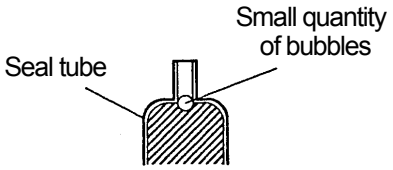

2 Balancing

Put the bottle and the cap in the balance, keep the difference of any two bottles which are arranged symmetrically within 0.3g.
When using CP-NX, CP-WX, CP-MX, and CP-α/β series centrifuges, you can balance the tubes simply by leveling the sample within 5mm.

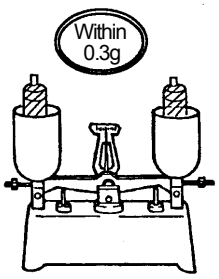

3 Sealing the tubes

(1) Wipe off moisture adhering inside the opening of the seal tube.
(2) Weld the seal tube according to the instruction manual of the STF-1, STF2 or STF3 tube sealer.

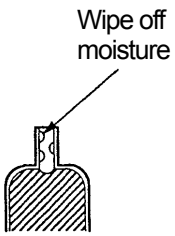

(i) Move the tube rack to the direction of arrows shown in the right figure to adjust position of the neck of the tubes (under the heater).

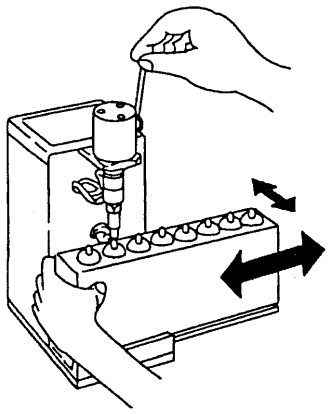

(ii) Depress the handle until the heater presses the neck of the tube. and then keep this condition for 2 to 3 seconds. Then depress the handle to the end and wait until the HEAT lamp is put out.

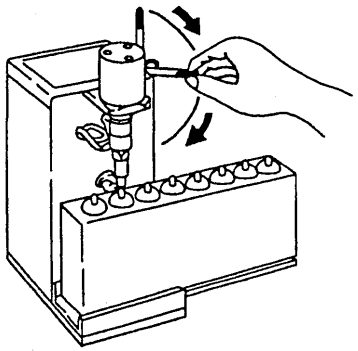

(3) Remove the protrusion on the welding part with your nail. Push the seal tube slightly and check that the sample does not leak. If the tubes are not welded completely, the tube may be deformed and the samples will leak.

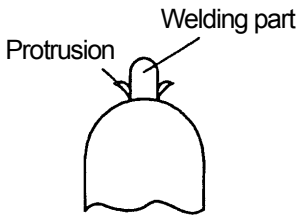

●Thick-walled tubes for angle rotors

Preparation

〈 Thick-walled tube 〉

<Sample>

<Injector>

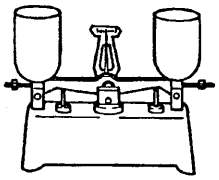

<Balance>

When you use CP-NX, CP-WX, CP-MX, and CP-α/β series centrifuges, this is not required for balancing.

1 Filling the sample

Fill the tube with the sample.
You can use the thick-walled tube with optional volume less than net capacity.

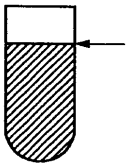

Net capacity vary with using rotor.

2 Balancing

Put the tube in the balance. Keep the difference of any two tubes which are arranged symmetrically with in 0.3g.

When using CP-NX, CP-WX, CP-MX, and CP-α/β series centrifuges, you can balance the tubes simply by leveling the sample within 5mm.

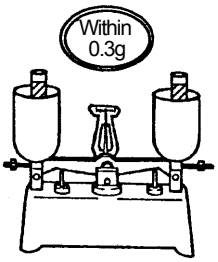

⚠ CAUTION: When using a 4.7PC thick-walled tube at the speed of over 60,000 rpm in the P100AT/P100AT2 rotor, cap a 4.7PC thick-walled tube with B-TI lid (Part No. S408523).

●Tubes for swing rotors

Preparation

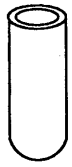

<Tube>

<Sample>

<Injector>

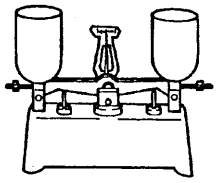

<Balance>

When you use CP-NX, CP-WX, CP-MX, and CP-α/β series centrifuges, this is not required for balancing.

1 Filling the sample

Fill the tube up to within 3mm from the top of the tube with the sample.

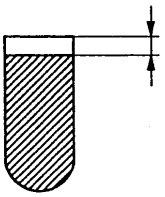

2 Balancing

Put the tube in the balance, keep the differen6e of any two tubes which are arranged symmetrically within 0.2g.

When using CP-NX, CP-WX, CP-MX, and CP-α/β series centrifuges, you can balance the tubes simply by leveling the sample.

When using three tubes, keep the difference of three tubes within 0.2g.

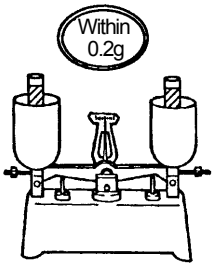

2.9 How to balance

Balance any two tubes with balance which sensitivity is less than 200mg, accessory of centrifuge. When using three tubes at swing rotor, Balance each of three tubes.
But using CP-NX, CP-WX, CP-MX, CP-α/β series centrifuge, you can balance the tubes simply by leveling the sample.

⚠ CAUTION : Extremely different sample quantities must be avoided. Failure to do so might damage mechanical components.

⚠ CAUTION : Do not load only one tube or load tubes asymmetrically : Asymmetrically loading may cause imbalance operation and damage the centrifuge and rotor.

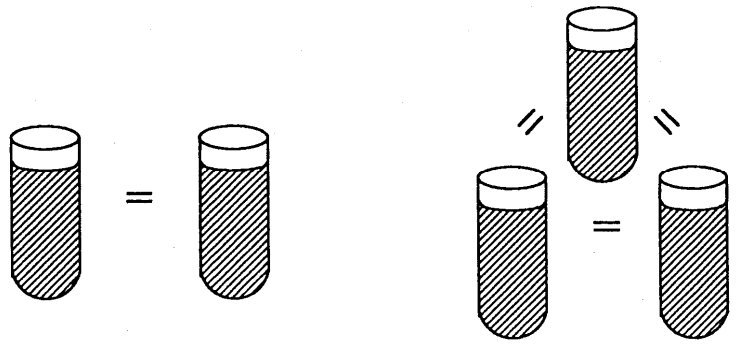

Balancing two tubes. Balancing three tubes.
When using three tubes at swing rotor.

Fig. 2-6 How to balance

⚠ CAUTION : Be careful that imbalance operation may occur in the following cases.
Fill the same sample in the tubes/bottles and load them in the rotor/buckets that are placed symmetrically with respect to the drive shaft in the rotor.

- If samples that are equal in volume but different in composition are used, the precipitation levels may be different by centrifugation and such operation may increase the level of imbalance.
- If samples that are equal in weight but different in volume (density) are used or if the tubes/bottles are different in inside diameter or shape, there may be variations in position of center of gravity and such operation may cause imbalance.

The tubes of the combination in Fig. 2-7 shall not set symmetrically because occurring imbalance during the operation.

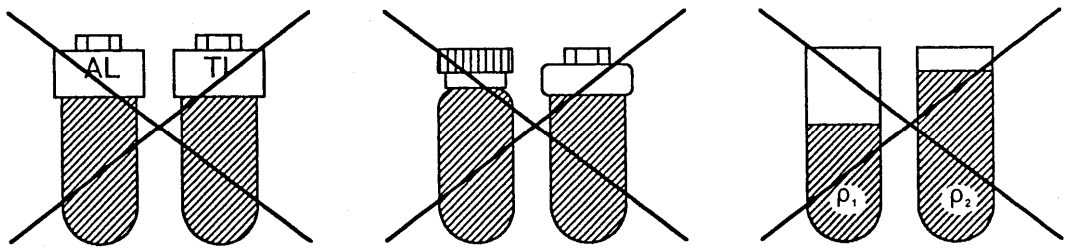

different caps different tubes different density

Fig. 2-7 Correct balancing

3. How to use rotors

3.1 Allowable rotor speeds

The rotor should never be used at any speed higher than the maximum speed marked on the rotor in any case. The rotor speed is limited by the following conditions :
DO NOT exceed this allowable speed.

(1) Allowable speed for density of the sample

- To centrifuge a sample of an average density more than 1.2g / mL;
  Determine the allowable speed from the following equation.

$$\text{Allowable speed (rpm)} = \text{maximum speed (rpm)} \times \sqrt{\frac{1.2}{\text{Average density of a sample (g/mL)}}}$$

- To centrifuge a sample with seal tubes in neo-angle rotors or vertical rotors ;
  These rotors can be used at their maximum speed with a sample with an average density less than 1.7g/mL. But in case of centrifuging a sample of an average density more than 1.7g /mL in these rotors, determine the allowable speed from the following equation.

$$\text{Allowable speed (rpm)} = \text{maximum speed (rpm)} \times \sqrt{\frac{1.7}{\text{Average density of a sample (g/mL)}}}$$

(2) Allowable speed for density gradient medium

The cesium chloride (CsCl) solution is frequently used as a density gradient medium, but if the CsCl solution with a high density is used, it may saturate during the rotation of the rotor depending on the rotation condition which may cause CsCl crystals to be educed. Educed crystals have a high density (approx. 4g / mL) and apply an excessive load to the rotor which is very dangerous. The crystallization will also greatly affect the density gradient of the CsCl solution and separation status of the sample. Therefore, always use a solution which will not crystallize within the allowable speed.

(3) Allowable speed for the combination of tubes, caps, etc.

The speed of the rotor should be limited by the combination of tubes (material: stainless steel, titanium alloy and so on), caps, etc. For details, see the rotor instruction manual.

(4) Allowable speed for the life of aluminum rotors

The aluminum rotors should be limited the speed after 1,000 runs or 2,500 hours used
See "4.6 Life of rotors."

3. 2 Sample limitation

⚠ WARNING :
- Never use any sample capable of producing flammable or explosive vapors.
  Your ultracentrifuge and rotor don't have an explosion-proof construction.
- Your ultracentrifuge and rotor are not designed to confine any sample particles dispersed due to a leakage.
  Therefore, when using radioactive, toxic or pathogenic materials, take additional precautions to prevent exposure to these materials, (e.g., use of isolated areas.)

3. 3 Adhesion of sample etc. ……

⚠ CAUTION : If sample etc. adheres to the rotor, use a soft cloth, etc. to wipe it off; leaving it could corrode the rotor.
Especially if sample adheres to the RLM adapter or optical adapter of rotor, immediately wipe it off; The adapter is aluminum alloy and susceptible to corrosion.
If the RLM adapter or optical adapter corroded, the rotor will be unusable.

3.4 Angle rotors

1 Preparation

(1) Check the rotor.

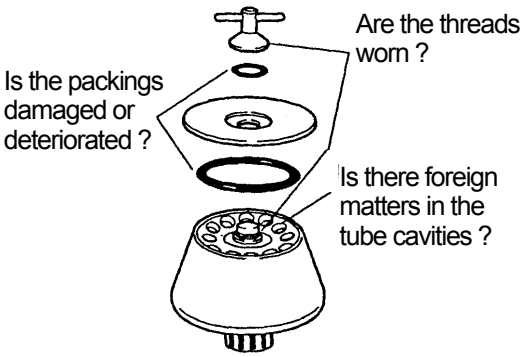

(2) Prepare tubes or bottles.
See 2.8 How to use Tube and Bottle

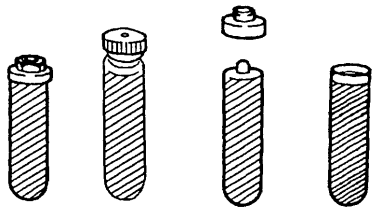

* When using seal tube, space cap is necessary.
For some seal tubes, float spacers are required.
See appendix 3.

2 Setting the tube or the bottle

(1) Set the tube or the bottle in the rotor with the tube setter or the bottle setter.

(2) When using the seal tube.
Place the space cap on the tube to prevent deformation of the tube during operation.
For some sealed tube and rotor combinations, a float spacer must be set before setting the space cap.

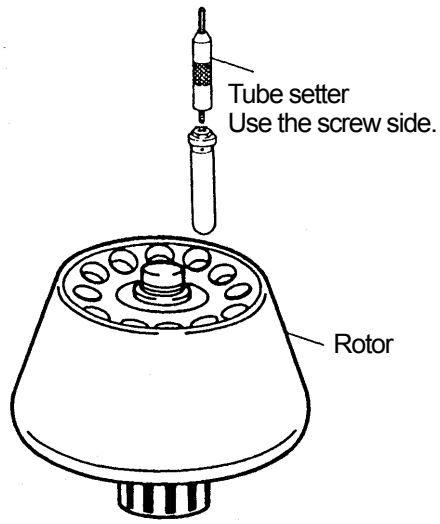

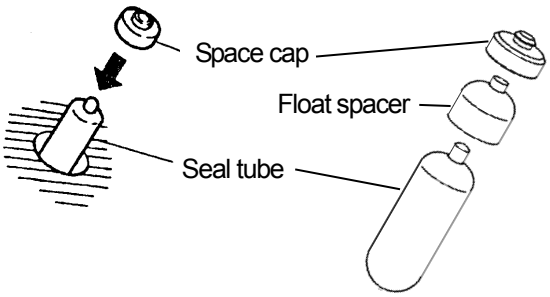

⚠ CAUTION : Set the tube or the bottle symmetrically within the allowable imbalance, 0.3g or less.

3 Setting the cover

Fit the cover to the rotor and tighten the handle. Unless tightened adequately, packings may come off during operation.

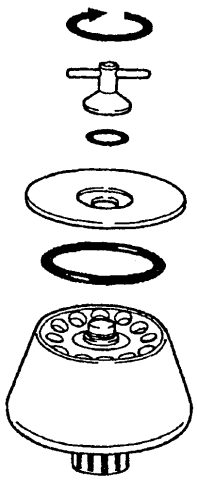

> ⚠ CAUTION : Be sure to attach the rotor cover to the rotor body and tighten handle securely.
> Insufficient tightening of the handle can cause coming off the rotor cover and damage the centrifuge and the rotor.

- If using the rotor which handle separate into the handle and the handle bar, insert the handle bar to the hole of the handle.

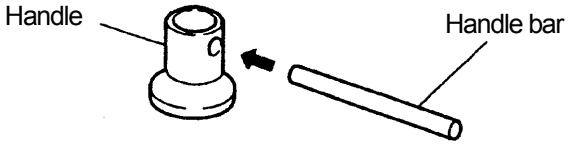

4 Operation

(1) Gently and securely set the rotor onto the drive shaft.

> ⚠ CAUTION : If using the rotor which handle separate into the handle and the handle bar, be sure to remove the handle bar after setting the rotor.

(2) For operation, refer to the instruction manual of the ultracentrifuge.

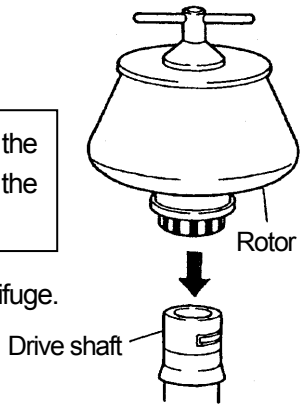

5 Removal of sample

(1) Upon completion of centrifuge, carefully remove the rotor from the drive shaft.
(2) Loosen the handle and remove the cover.
(3) Take tubes or bottles out with the tube setter etc.
When using the seal tube under 10°C, it may be hard to take the tube out as soon as the rotor has stopped. In this case, take the tube out after 10 - 30 minutes.
(4) Recover supernatants or pellets.

> ⚠ CAUTION :
> - Each time the rotor with optical adapter is used, be sure to enter the results in the "rotor log book": Failure to do so will disable management of the life of rotor. (No entry is needed for the rotor with RLM adapter.)
> - Perform maintenance and inspection of the rotor each time it is used. If there is any abnormality, immediately stop using the rotor, and contact an authorized sales or service representative: Refer to "4.2 Maintenance of Rotors" and "4.4 Inspection of Rotors".

3.5 Swing rotors

●Swing rotors (hook type buckets or pin type buckets) other than the P32ST rotor and the P32ST2 rotor

1 Preparation

(1) Check the rotor.

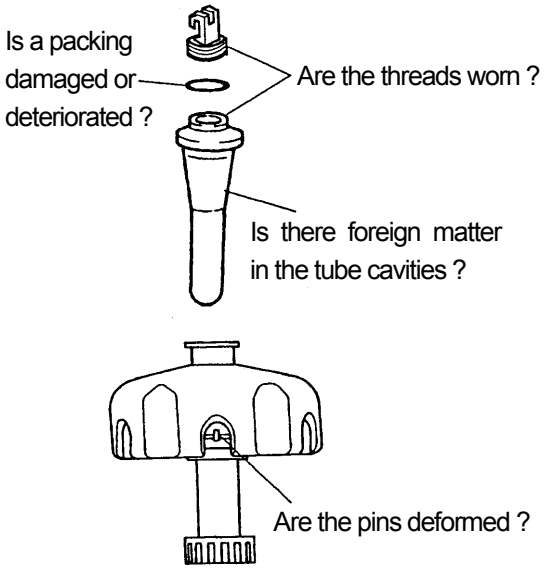

(2) Prepare the tubes.

See 2.8 How to use Tube and Bottle

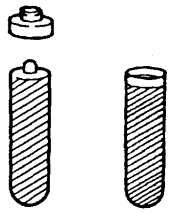

* When using seal tube, space cap is necessary. See appendix 3.

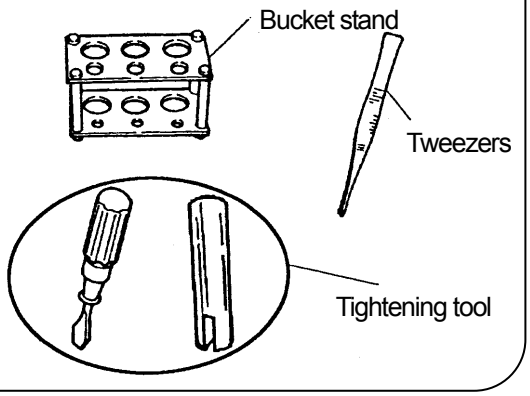

2 Preparation of the bucket

(1) Remove the cap from the bucket.
Stand the bucket in the bucket stand.

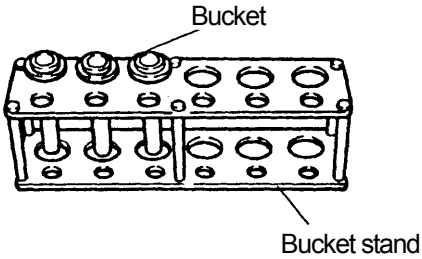

(2) Set the tube to the bucket.
Be sure to set balanced tubes symmetrically.

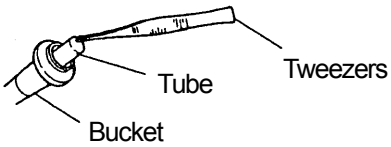

When using the seal tube, place the space cap on the tube to prevent deformation of the tube during operation.

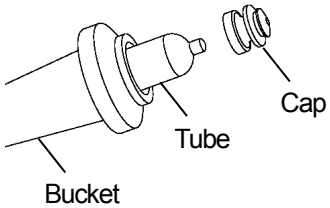

(3) Tighten the cap of the bucket.
<u>Tighten the numbered cap to the same numbered bucket.</u>

●**P65ST**

Set the supplied driver into the slot of the cap and tighten it completely.

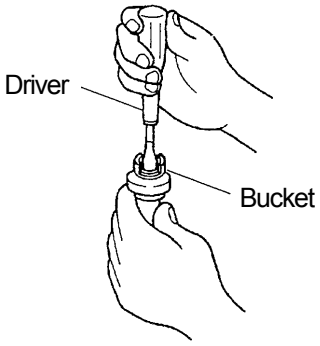

●P28S, P28S2

Tighten the numbered cap to the same numbered bucket by hand to match each mark of the bucket and the cap.

Tighten the cap until the bottom of the cap bumps to the bucket and the cap must be adjusted to the match mark of the bucket.

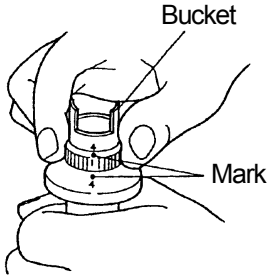

●P55ST2, P50S2, P40ST, P56ST

Tighten the numbered cap to the same numbered bucket with the supplied cap spanner to match each mark of the bucket and the cap.

Tighten the cap until the bottom of the cap bumps to the bucket and the cap must be adjusted to the match mark of the bucket.

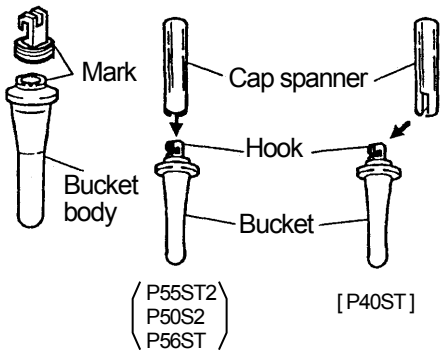

⚠ CAUTION : Imperfect tightening of the cap may cause imbalance operation and it may cause the serious accident.

3 Setting the bucket

⚠ WARNING : When using swing rotor be sure to set all buckets whether or not samples are Put in buckets: Failure to do so could not only cause the rotor to vibrate, but could result in the rotor being deformed and the buckets becoming detached, which is very dangerous. Never use buckets made by other companies, or any other type of bucket that is not exclusively made for the rotor even if it is made by us.

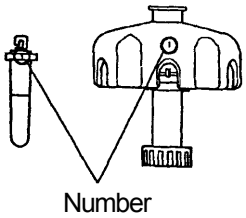

Match numbered buckets with number of rotor and set the buckets to the rotor.

● P65ST

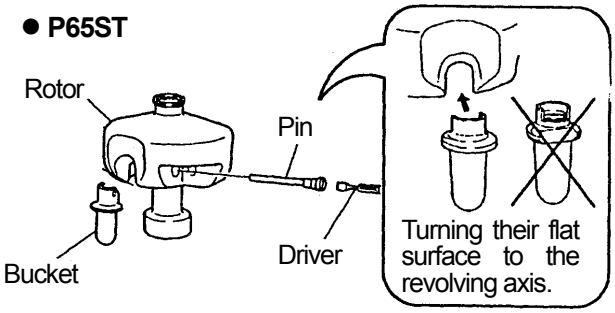

(1) Insert the pin through holes of the rotor and the bucket.

(2) Tighten them with supplied driver.

● All rotors except P65ST

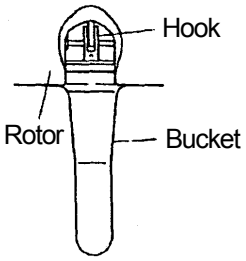

Hang the hook of the bucket on the pin of the rotor. When using the rotor which has two hooks, make sure that both hooks hang on the pin.

4 Operation

⚠ WARNING : Before setting a rotor in ultracentrifuge, make sure that buckets have been securely installed in the rotor : Incorrect installation of buckets in rotor could damage the rotor or detach the buckets, which is very dangerous.

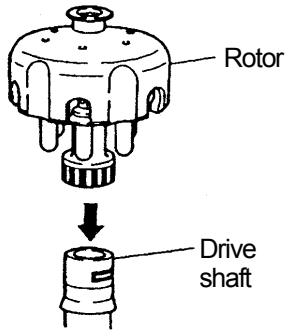

- When using the rotor with hook-type buckets, be sure to hang on the bucket on the pin of the rotor correctly with a mirror or like this.
- Carry the large rotors with the supplied rotor setter. After setting the rotor, be sure to remove the rotor setter.

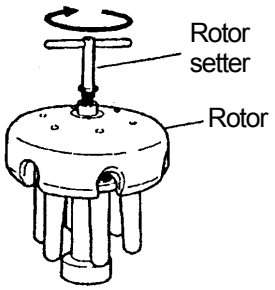

(1) Gently and securely set the rotor onto the drive shaft.

(2) For operation, refer to the instruction manual of the ultracentrifuge.

5 Removal of sample

(1) Carefully remove the rotor from the drive shaft.

(2) Remove the buckets from the rotor.

- P65ST ··· Unscrew the pin with the driver.
- All rotors except P65ST ··· Remove the bucket by hand.

(3) Remove the cap from the bucket with the driver or the cap spanner.

(4) Take tubes out with tweezers.

(5) Recover supernatants or pellets.

⚠ CAUTION :
- Each time the rotor with optical adapter is used, be sure to enter the results in the "rotor log book": Failure to do so will disable management of the life of rotor. (No entry is needed for the rotor with RLM adapter.)
- Perform maintenance and inspection of the rotor each time it is used. If there is any abnormality, immediately stop using the rotor, and contact an authorized sales or service representative: Refer to "4.2 Maintenance of Rotors" and "4.4 Inspection of Rotors"

●P32ST rotor and P32ST2 rotor (top loading type buckets)

1 Preparation

(1) Check the rotor.

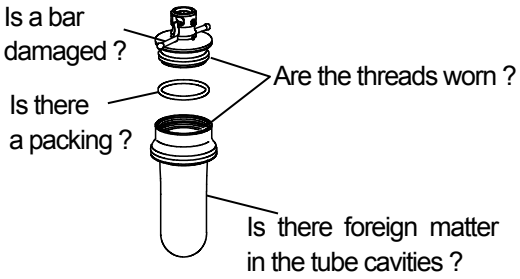

(2) Prepare the tubes.

See 2.8 How to use Tube and Bottle

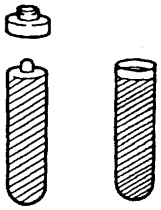

* When using seal tube, space cap is necessary. See appendix 3.

(3) Prepare accessories.

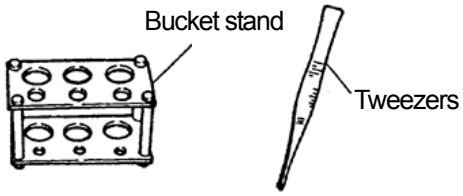

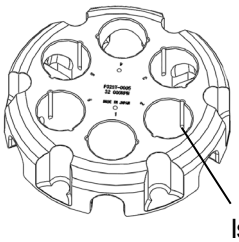

Is the end of the groove for the bucket bar deformed ?
Does any foreign matter adhere on the end of the groove for the bucket bar?

2 Preparation of the bucket

(1) Remove the cap from the bucket.
Stand the bucket in the bucket stand.

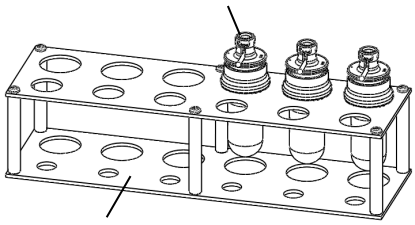

(2) Set the tube to the bucket.
Be sure to set balanced tubes symmetrically.

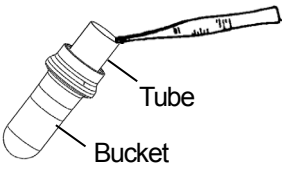

When using the seal tube, place the space cap on the tube to prevent deformation of the tube during operation.

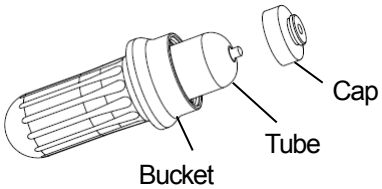

(3) Tighten the cap of the bucket.
Tighten the numbered cap to the same numbered bucket by hand to match each mark of the bucket and the cap.
Tighten the cap until the bottom of the cap bumps to the bucket and the cap must be adjusted to the match mark of the bucket.

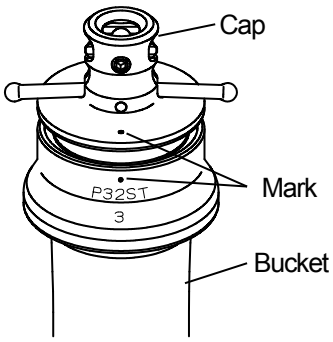

⚠ CAUTION : Imperfect tightening of the cap may cause imbalance operation and it may cause the serious accident.

3 Setting the bucket

⚠ WARNING : When using swing rotor be sure to set all buckets whether or not samples are Put in buckets: Failure to do so could not only cause the rotor to vibrate, but could result in the rotor being deformed and the buckets becoming detached, which is very dangerous. Never use buckets made by other companies, or any other type of bucket that is not exclusively made for the rotor even if it is made by us.

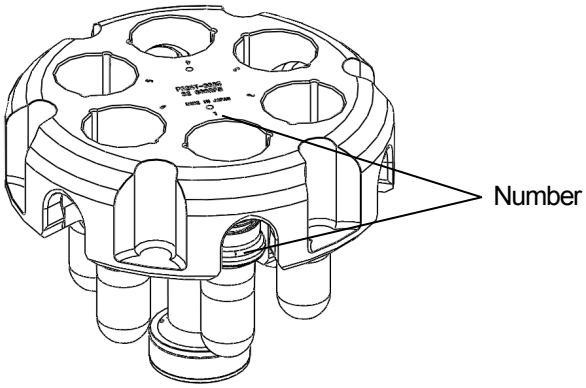

Match numbered buckets with number of rotor and set the buckets to the rotor.

4 Operation

⚠ WARNING : Before setting a rotor in ultracentrifuge, make sure that buckets have been securely installed in the rotor : Incorrect installation of buckets in rotor could damage the rotor or detach the buckets, which is very dangerous.

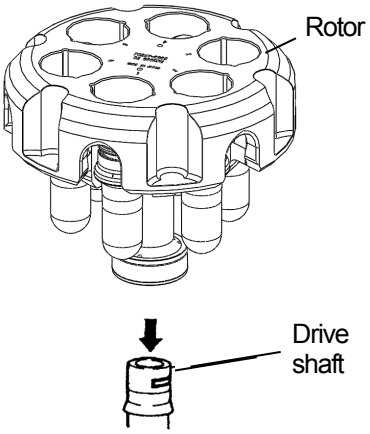

(1) Gently and securely set the rotor onto the drive shaft.
(2) After mounting the rotor on the drive shaft, check that the buckets swing smoothly by touching buckets gently.
(3) For operation, refer to the instruction manual of the ultracentrifuge.

5 Removal of sample

(1) Carefully remove the rotor from the drive shaft.
(2) Remove the buckets from the rotor.
(3) Remove the cap from the bucket.
(4) Take tubes out with tweezers.
(5) Recover supernatants or pellets.

⚠ CAUTION : Perform maintenance and inspection of the rotor each time it is used. If there is any abnormality, immediately stop using the rotor, and contact an authorized sales or service representative: Refer to "4.2 Maintenance of Rotors" and "4.4 Inspection of Rotors"

3.6 Neo angle rotors and titanium vertical rotors

1 Preparation

(1) Check the rotor.

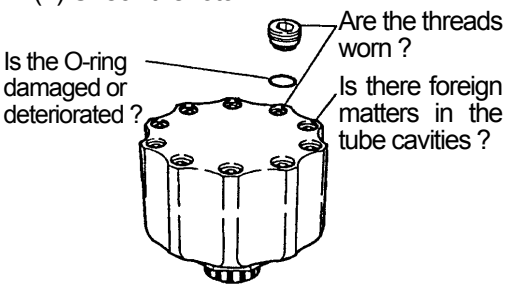

(2) Prepare the tubes.

See 2.8 How to use Tube and Bottle
- Seal tubes

(3) Prepare the accessories.

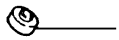
Space cap for seal tubes

Tube setter for seal tubes

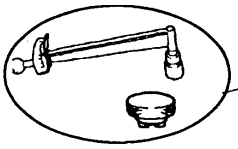
Tightening tool

2 Setting the tubes

(1) Load the rotor symmetrically with the tubes within allowable imbalance (0.3g or less) by using the tube setter or the removal tool. Excessive imbalance may damage the rotary shaft of the centrifuge.

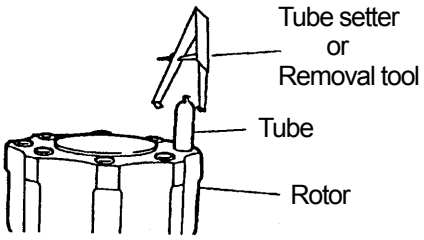

(2) Place the space caps on the tubes to prevent deformation of the tubes during operation.

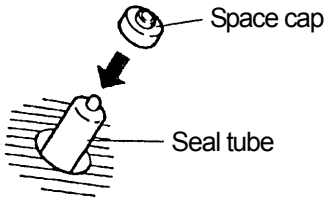

3 Setting the caps to rotor

● Using SEAL TUBE in P100VT, P83VT, P65VT2
(1) Fix the holder base to a desk, etc..
(2) Fix the rotor to the ditch of the holder base.
(3) Place the cap on the rotor and tighten to 12N·m with the torque wrench.

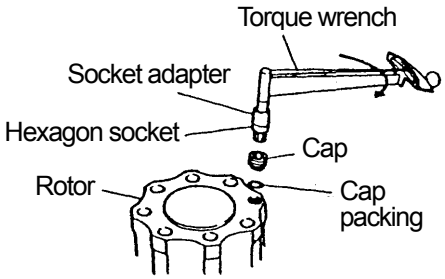

● Using SEAL TUBE in P50VT2, P65VT3, P90NT, P65NT, P65NT2
(1) Fix the projection of the handle to the hole of the cap.
(2) Tighten the cap securely with the handle.
(3) Remove the cap handle.
Don't operate the rotor with the cap handle.

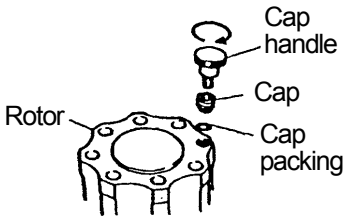

* 1N·m= 10.2Kgf·cm

⚠ CAUTION : If the number of tubes to be set is small, do not install the space cap or the cap in the tube cavity into which no tube is inserted, but stay the cavities uninstalled for operation.

4 Operation

(1) Gently and securely set rotor onto the drive shaft.
(2) For operation, refer to the instruction manual of the ultracentrifuge.

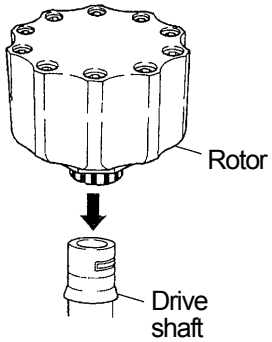

Longer acceleration and deceleration will result in better separation. If you start with homogeneous solution, slow deceleration only.
For more detail, refer to the instructions of the centrifuge.

5 Removal of sample

(1) Upon completion of centrifuging, carefully remove the rotor from the drive shaft.
(2) Remove the cap with the handle or the torque wrench.
(3) Take space caps and tubes out with the tube setter.
(4) Recover supernatant or pellets.

⚠ CAUTION :
- Each time the rotor with optical adapter is used, be sure to enter the results in the "rotor log book": Failure to do so will disable management of the life of rotor. (No entry is needed for the rotor with RLM adapter.)
- Perform maintenance and inspection of the rotor each time it is used. If there is any abnormality, immediately stop using the rotor, and contact an authorized sales or service representative: Refer to "4.2 Maintenance of Rotors" and "4.4 Inspection of Rotors".

4. Maintenance

4.1 Anti-corrosion property

The anti-corrosion properties depend on the material of the rotor. See chemical resistance chart in separate manual.

* The over-speed adapters of all rotors are made from aluminum alloy.
* The covers of some titanium angle rotors are made from aluminum alloy.
  Consult Fig.1-1.
* The caps of all titanium vertical rotors are made from aluminum alloy.

The surface of aluminum rotors is anodized.

However, when salt solution (cesium chloride) is used in a swing rotor's bucket made from aluminum alloy, the bucket may be broken during centrifuging it is corroded. For salt solution, use a rotor with a bucket made from titanium alloy or replace with a bucket made from titanium alloy. Consult the sales agent when replacing the bucket.

4.2 Maintenance of rotors

Do maintenance the rotor to avoid corrosion after use.

(1) Ordinary maintenance

1) Wash the rotor with tap water or dilute neutral detergent.
2) Rinse with distilled water.
3) Wipe off water drops with soft cloth and dry the rotor up-side down.
   After drying, coat the rotor with the silicone grease (vacuum grease). For drive hole, coat with silicone grease (vacuum grease) and wipe it. Store the rotor in a dry place.
   Be sure to keep the RLM rotor on the rotor stand provided to protect the RLM adapter.

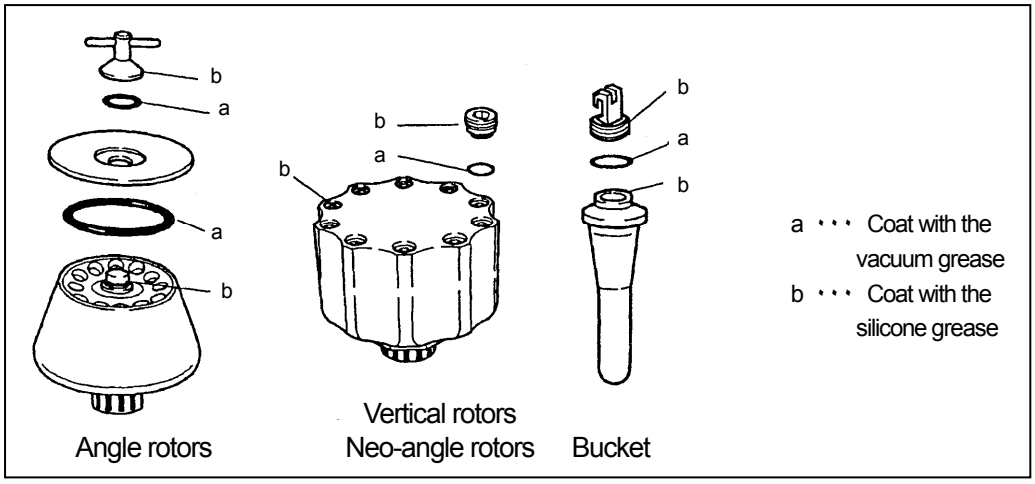

Fig.4-1 Coating the grease

For the rotor body of the swing rotor, wipe and coat with the silicone grease (vacuum grease).

(2) After using corrosive samples

Wash the rotor with flowing water for a while and then perform ordinary maintenance.

(3) If foreign matter adheres to the rotor

Soak the rotor in warm water (40~50°C) for a while, and remove foreign matter with a cleaning bar or a soft brush.

If you cannot remove it, contact an authorized sales or service representative.

⚠ WARNING : Do not allow the temperature of aluminum rotors and titanium rotors to rise above 100°C.
This would cause the material to become brittle.

⚠ CAUTION :
- Use only detergent pH 5-9 to clean the rotor; Using other detergents could discolor or corrode aluminum alloy portion of RLM adapter, optical adapter, etc.
- Clean the inside of the drive hole (crown hole) of the rotor and the surface of the drive shaft (crown) of the centrifuge once a month. If the drive hole or the drive shaft is stained or any foreign matter is adhered, the rotor may be improperly installed and come of during operation.

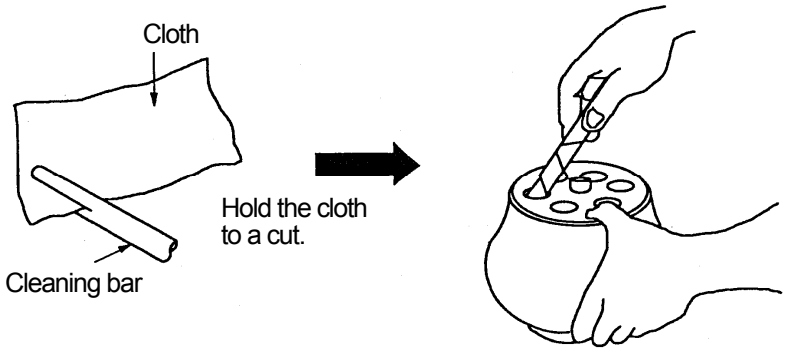

Fig.4-2 How to the use a cleaning bar

4.3 Sterilizing rotors

Sterilize the rotor appropriately following Table 4-1.

> ⚠ WARNING : Do not autoclave the rotor or sterilize it in boiling water because its material may deteriorate and its strength may decrease.

Table 4-1 Sterilizing of rotor

○:Usable ×:Not usable

		Aluminum rotors	Titanium rotors
Autoclaving	115°C (0.7kg/cm^2) for 30 min.	×	×
	121°C (1.0kg/cm^2) for 20 min.	×	×
	126°C (1.4kg/cm^2) for 15 min.	×	×
Boiling	15-30 min.	×	×
Ultraviolet rays	200-300 nm.	○	○
Gas	Ethylene oxide	○	○
	Formaldehyde	○	○
Chemical solution	Ethanol (70%)	○	○
	Hydrogen peroxide (3%)	○	○
	3% Formalin*	○	○
Heat resistance (°C)		100	100

*Do not dip the rotor in the formalin (3%) solution more than 2 hours.

4.4 Inspection of rotors

Check the rotor as follows after every use.

- If the optical adapter/disk is unclean, wipe it with a soft cloth but do not damage it.
- Replacements of packing and O-rings are available.
- If the rotor appears to be corroded (deformation, cracks or discoloration is observed), do not use the rotor and call an authorized sales representative. The rotor may be irreparable depending on the degree of corrosion and wear.

● **Angle rotors**

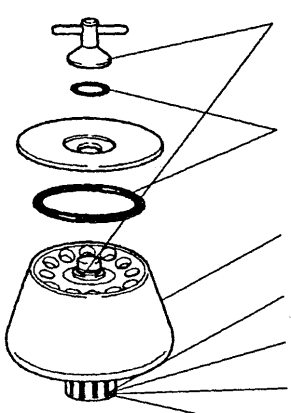

● Vertical rotors and Neo-angle rotors

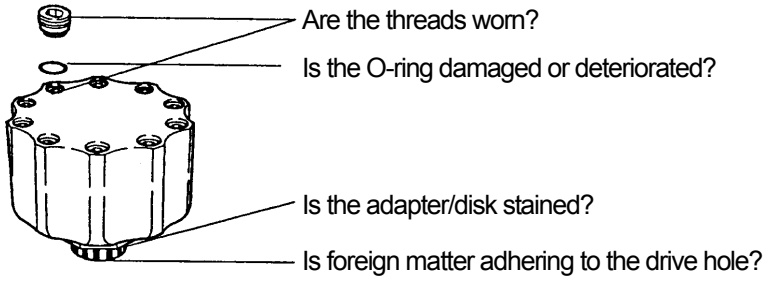

● Swing rotors

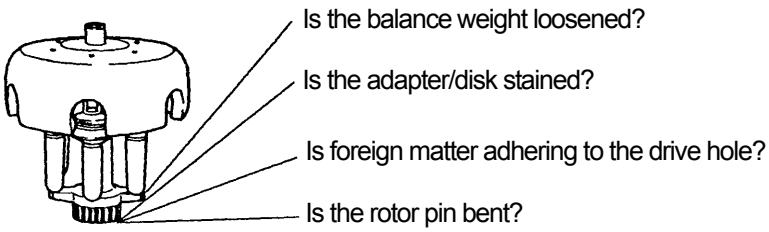

● Buckets of swing rotors

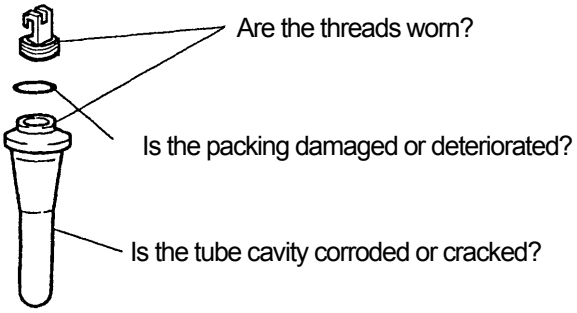

> ⚠ CAUTION : Check the packing (O-ring) every time. Replace it with new one if deterioration (crack, deformation, etc.) is observed. Otherwise, samples might be damaged due to poor rotor seal or the centrifuge or the rotor might be damaged during operation.

4.5 Replacing optical adapter/disk

The optical adapter/disk, if corroded or discolored, must be replaced immediately. Call the Sales Agent if it is necessary to replace the optical adapter. To replace the optical disk, follow the procedure below.

> ⚠ CAUTION :
> ● The optical disk plays an important role to control the rotor revolution speed. The optical disk must match the maximum speed of the rotor.
> ● When replacing, be very careful not to damage the optical disk and rotor body.

● **Replacing the optical disk**

(1) Preparation

- Prepare a new optical disk and knife. Make sure that the number of stripes of the new optical disk is right as meted in Table 4-2.
- Wash and then dry the rotor well.

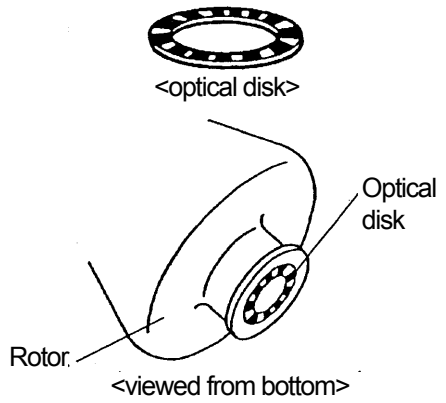

Fig.4-3 Optical disk

Table 4-2 Rotor's maximum speed and optical disk's number of stripes

Rotor's maximum speed (rpm)	Optical disk's number of black bands	Rotor's maximum speed (rpm)	Optical disk's number of black bands	Rotor's maximum speed (rpm)	Optical disk's number of black bands
100,000	9	50,000	18	30,000	29
90,000	10	48,000	19	28,000	32
80,000~83,000	11	45,000	20	27,000	33
70,000	13	42,000	21	25,000	35
65,000	14	40,000	22	23,000	39
60,000	15	38,000	24	21,000	40
55,000~56,000	16	35,000	25	19,000	45
54,000	17	32,000	28	17,000	50

(2) Hold the rotor upside down.

(3) Pry the edge of the optical disk with the knife and remove the disk. Be very careful not to damage the rotor.

(4) Clean the disk hole on the rotor by using alcohol.

(5) Remove the backing paper from the new optical disk.
Place the optical disk so that it snugly fits into the groove of the disk hole on the rotor. Make sure the disk does not move.

● **Pin Guide Replacement**

When used with the 55PA, 65P and 55P-2 centrifuges, some rotors may need a pin guide (1.7 Relation between Rotor and Ultracentrifuge). If the rotors has a balance weight in place of a pin guide, replace it with a pin guide. If the pin protrudes from the pin guide, the pin guide should be replaced.

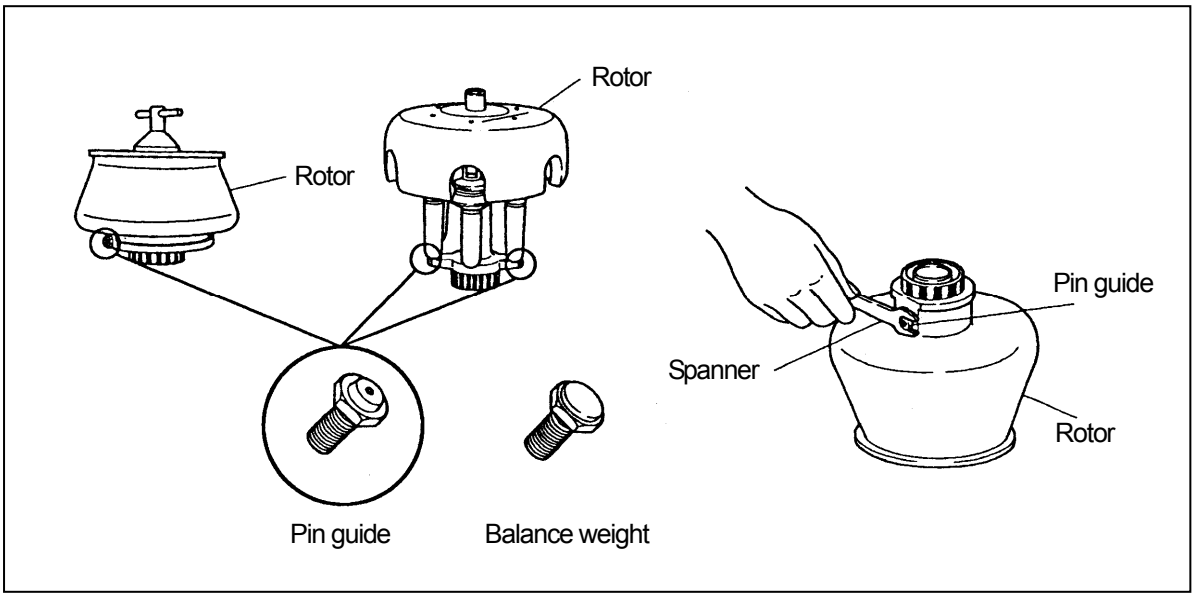

Fig.4-4 Pin guide attachment positions and how to attach

Use the spanner provided with the centrifuge to remove the pin guide or balance weight. Attach the new pin guide and tighten it with the spanner securely.

● When replacing the pin guide, check the number indicated on its head and use the guide the number of which corresponds to the maximum permissible speed of the rotor.

Example:

If the maximum speed of rotor is 50,000 rpm, the number should be 50. The maximum permissible speed decreases with an aluminum-alloy rotor that has exceeded its first lifetime. Be careful when selecting a pin guide for such a rotor.

4.6 Life of rotors

⚠ WARNING : ● Do not use the rotor that has exceed it's lifetime; to do so might cause the rotor failure and the centrifuge might be damaged.

While using rotor repeatedly, its strength decreases gradually due to fatigue and creep of material, by which the rotor life is determined.

●Aluminum angle rotors and Swing rotors other than the P32ST rotor and the P32ST2 rotor

Aluminum angle rotors and the swing rotors other than the P32ST rotor and the P32ST2 rotor are assumed to be in the first lifetime until they reach 1,000 operation times or 2,500 accumulated hours. It is necessary to inspect rotors that have exceeded their first lifetimes at the works (this is charged). Then the maximum permissible speed should be decreased by 10% and the rotor is assumed to be in its second lifetime until it reaches 1,000 operation times or 2,500 accumulated hours.

●P32ST rotor and P32ST2 rotor

The P32ST rotor is assumed to be in the first lifetime until it reaches 500 operation times or 2,500 accumulated hours.

The P32ST2 rotor is assumed to be in the first lifetime until it reaches 500 operation times or 2,500 accumulated hours, too.

It is necessary to inspect the rotor that has exceeded its first lifetime at the works (this is charged).

It is necessary to replace all buckets with new ones (this is charged) (only P32ST rotor).

Then the maximum permissible speed should be decreased by 10% and the rotor is assumed to be in its second lifetime until it reaches 500 operation times or 2,500 accumulated hours.

The service life of RLM Rotor will be automatically calculated from the rotor speed and operating hours. Namely, if you use the rotor at a speed lower than its maximum permissible speed, the service life, in operating times and hours, will be prolonged automatically by calculating from the strength of rotor material.

●Titanium angle rotors, Neo-angle rotors and Vertical rotors

The titanium angle rotors, neo-angle rotors and vertical rotors must not be used when they reach 5,000 operation times or 10,000 accumulated hours. These rotors do not have a second lifetime.

⚠ CAUTION : ● Each time the rotor with optical adapter is used, be sure to enter the results in the "rotor log book" : Failure to do so will disable the management of the life of rotor. (No entry is needed for the rotor with RLM adapter.)

■ When using the rotor with optical adapter, the "rotor log book" is essential to manage the life of rotor and for warranty when an accident occurs : Be sure to enter the results in it when using the rotor with optical adapter, and do not lose it.
If any results of use are not entered in the "rotor log book", note that the rotor will not be covered by warranty.

5. Troubleshooting

5.1 Rotors

Check the rotor immediately if it has something wrong.
Table 5-1 summarizes trouble symptoms, possible causes and actions to be taken.

- If the rotor has fallen on the floor by accident, have it checked by an authorized sales or service representative whether of not it is deformed.
  If the rotor has fallen in the rotor compartment of the centrifuge, do not use the centrifuge and call an authorized sales or service representative immediately.

- If there is only a trifle symptom of trouble, locate and remove the cause.
  If the cause cannot be located, do not use the device and call an authorized sales or service representative immediately.

Table 5-1 Troubleshooting of the rotor

Symptom	Possible causes and actions
The rotor packing or cap packing breaks or comes out of position.	・Are handle and cap tight securely? ・Isn't packing elongated? ・Is specified packing used?
The handle or the cap cannot be tightened.	・Is lubricant applied to threads? →If threads are defective, call for repair.
The rotor pin is bent.	→Call for repair. *
The swing rotor's bucket hook is deformed.	・Is the hook tightened at the wrong position set by the tightening tool? →It should be repaired.
The swing rotor's bucket does not swing normally.	・Is the bucket installed in reverse?(See 3.5 Swing rotors) ・Is the bucket cap tightened securely? Do the marks match? ・Is the bucket type correct? →If there is even a slight abnormality, inspect the rotor again.
The rotor is stuck on the shaft.	・Dust or something like that is sticking to the shaft or drive hole. Call an authorized sales or service representative.
The aluminum rotor's tube cavity or bucket have changed color.	・Rinse sufficiently. ・If white dots are found after rinsing, inspection is necessary. Consult a sales agent. ● If there is too much corrosion, it may not be possible to repair it. ● If an aluminum bucket (old product) is used with a swing rotor, it could be corroded or broken unless it is maintained carefully. It is recommended to replace it with a titanium bucket.

Symptom	Possible causes and actions
The ROTOR alarm lights on the centrifuge.	・ The reflector (striped part) of the optical adapter or disk is unclean or damaged. →Wipe it with a soft cloth. Replace the adapter of disk if damaged. ● If the optical adapter needs replacement, call the Sales Agent. To replace the optical disk, see 4.4 Inspection of Rotors ● replacing the optical disk
The IMBALANCE alarm lights on the centrifuge.	・ Is the sample well balanced? ・ Isn't the sample taking?
The SPEED alarm lights on the centrifuge.	・ Isn't the speed set higher than the maximum permissible value?
If another alarm lights on the centrifuge, refer to the operating instructions of the centrifuge.	

* If the rotor needs to be repaired, it must be sent to the factory. So, call an authorized sales or service representative immediately.
Before shipping the rotor, be sure to sterilize and wash it.

5.2 Tubes

The tube can be deformed or damaged by varying causes.
Check the following items in the order described. Additionally, see 2.6 Inspection and 2.7 Life.

(1) Isn't the amount of the sample too small?
→ See 2.8 How to use Tube and Bottle and 2.9 How to balance .

↓

(2) Isn't the speed higher than the maximum permissible value? →
→ See 3.1 Allowable Rotor Speeds and the rotor instruction manual.

↓

(3) Are the cap, space cap, float spacer, etc. combined properly?
Are the parts of the cap combined properly?
→ See appendix 1 , appendix 2, appendix 3, and the rotor instruction manual.

↓

(4) Is the cover or the cap of the rotor tight?

- Is the cap of the tube tightened firmly?
- When using seal tubes, is the tube sealer adjusted properly?
  (heater height, centering) → See the STF-1 instructions, the STF2 instructions, or the STF3 instructions.
  Are burrs removed after welding? → See the STF-1 instructions, the STF2 instructions, or the STF3 instructions. .
- Is the tightening torque of the caps of the neo-angle rotors or the vertical rotors right?
  → See 3.6 Neo angle rotors and titanium vertical rotors.

↓

(5) Aren't parts like the cap deteriorated or worn? → See 2.6 Inspection .
Deteriorated or worn parts must be replaced.

↓

(6) Is the sample and detergent good? → See 2.2 Materials of Tubes .
Are sterilizing conditions right? → See 2.4 Sterilization .

- If the tube is squeezed, fill the tube hole on the rotor with tepid water and, after a few minutes, pull out the tube by using tweezers or something like that.

- If there is only a trifle symptom of trouble, locate the cause or call an authorized sales or service representative.
  If such a symptom is overlooked, an accident might result.

- If the cap has fallen in the bottom of the tube hole and you cannot remove it, call an authorized sales or service representative.

* When calling an authorized sales or service representative, keep the part of interest available for examination.

Appendix 1 The list of caps for tubes

Different caps use a different composition or parts materials.
Be careful not to combine unsuitable parts.

● Component

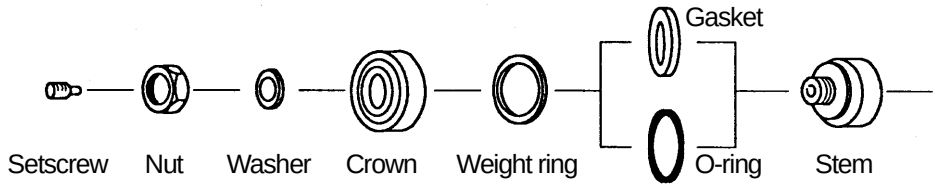

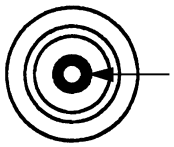

Insert
When seeing the stem from the bottom, you can see the black insert.

● Materials

Setscrew ····· SST (stainless steel)

Washer ····· POM (polyacetal)

Crown, Nut, Stem ····· AL (aluminum alloy), Ti (titanium alloy), or SST (stainless steel). See the list at next page.

Weight ring ····· AL (aluminum alloy) or Ti (titanium alloy). See the list at next page.

Gasket, O-ring ····· NBR (nitrile-butadiene rubber) or CR (chloroprene rubber). See the list at next page.

Insert ····· Nylon

Caps \ Parts	Set screw	Nut	Washer	Crown	Weight ring	O-ring	Gasket	Stem	Insert
A3-AL Cap 336711A	---	80130058 AL	---	474123 AL	---	S401807A NBR	---	474121 AL	---
B-AL Cap 414429A	S401829A SST	441393 AL	---	414432 AL	---	---	S401778A CR	453411A AL	S401791A NY
B2-AL Cap 474507A	S401829A SST	441393 AL	---	474641 AL	---	S401821A NBR	---	474639A AL	S401791A NY
B-TI Cap 460696A	S401829A SST	459561 TI	---	459559 TI	---	---	S406626A NBR	460697A TI	S401791A NY
B2-TI Cap 474070A	S401829A SST	4595612 TI	---	474073 TI	---	S401815A NBR	---	474071A TI	S401791A NY
C-AL Cap 441399A	S401829A SST	441393 AL	---	441392 AL	---	---	S401796A CR	453412A AL	S401791A NY
C4-AL Cap S407404A	S401829A SST	441393 AL	---	S407407 AL	---	S401803A NBR	---	S407405A AL	S401791A NY
C-TI Cap 463577A	S401829A SST	463567 TI	---	463569 TI	---	S401803A NBR	---	463576A TI	S401791A NY
C2-TI Cap 481649A	S401829A SST	4595612 TI	---	481652 TI	---	S401803A NBR	---	481650A TI	S401791A NY
C-SST Cap 413312A	S401829A SST	413309 SST	---	413308 SST	---	---	S401796A CR	453413A SST	S401791A NY
E-AL Cap 321517A	S401829A SST	434022 AL	S401813A POM	435519 AL	459814 AL	S401787A NBR	---	453416A AL	S401791A NY
E2-AL Cap 331198A	S401829A SST	434022 AL	---	434021 AL	459814 AL	S401787A NBR	---	453416A AL	S401791A NY
E3-AL Cap S305231A	S401829A SST	S408401 AL	S401813A POM	S408400 AL	459814 AL	S401787A NBR	---	S408421A AL	S401791A NY
E4-AL Cap S308090A	S401829A SST	S408401 AL	S401813A POM	S411239A AL	459814 AL	S401787A NBR	—	S408421A AL	S401791A NY
E-TI Cap 474272A	S401829A SST	474277 TI	---	474276 TI	474275 TI	S401787A NBR	---	474273A TI	S401791A NY
E-TI2 Cap 339673A	S401829A SST	434421 AL	S401811A POM	478423 TI	459814 AL	S401787A NBR	---	478421A AL	S401791A NY
E-SST Cap 451480A	S401829A SST	4187622 SST	---	451481 SST	---	---	S406625A CR	453417A SST	S401791A NY
E2-SST Cap 418763A	S401829A SST	4187622 SST	---	418765 SST	---	---	S406625A CR	453417A SST	S401791A NY
F-AL Cap 322690A	S401829A SST	434421 AL	S401811A POM	436127 AL	459818 AL	S401792A NBR	---	453414A AL	S401791A NY
F2-AL Cap 325968A	S401829A SST	434421 AL	S401811A POM	435766 AL	459818 AL	S401792A NBR	---	453414A AL	S401791A NY
F-SST Cap 418759A	S401829A SST	418762 SST	---	418761 SST	---	---	S401797A CR	453415A SST	S401791A NY

NOTE1) the upper = part No. the lower = materials

NOTE2) Set screw, washers, O-rings, gaskets and inserts are available in sets of 10.

NOTE3) Individual nuts, crowns, weights and stems are available. The stem is provided with an insert.

Appendix 2 The list of S-Series Cap and tools

S-Series Cap (For 12PA/12PE/40PA/40PE tubes)

● Component

●Materials
AL: Aluminum alloy
TI: Titanium alloy
NY: Nylon

●Names of parts

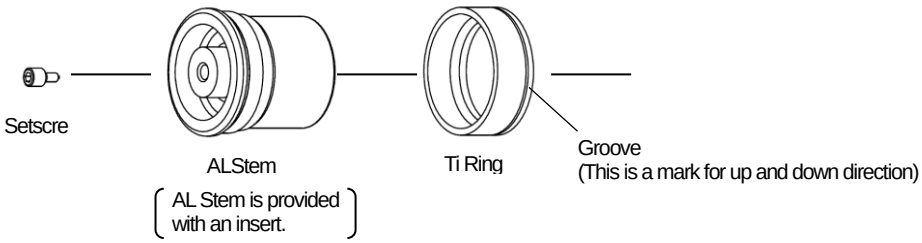

Parts / Caps	Set screw	AL Stem	Insert	Ti Ring
S-12AL Cap S410542A	S401829A	S410543A AL	S401791A NY	S410545 TI
S-40ALCap S410532A	S401829A	S410533A AL	S401791A NY	S411473 TI

NOTE1) the upper = part No. the lower = materials
NOTE2) Setscrew and inserts are available in sets of 10.
NOTE3) Individual AL Stems and Ti Ring are available.

● S-Cap Tool Set

The caps are not included in S-Cap Tool Set.
Please purchase applicable ones.

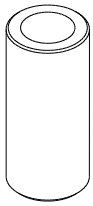
Tube Holder E

Tube Holder C

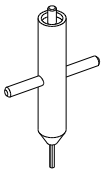
Tube Setter(C)

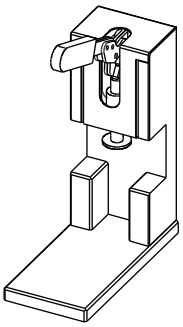
Hand Press

Cap	Tool set	Parts of the tool set			Applied rotors
		Tube Holder	Tube Setter	Hand Press	
S-12ALCap S410542A	S308625A S-Cap Tool Set	S411487 Tube Holder C	481056A Tube Setter(C)	S204591B Hand Press	P90AT, P80AT, P70AT2
S-40ALCap S410532A		S411486 Tube Holder E			P70AT, P50AT2

※Use the Tube Holder C inserted in Tube Holder E.

● Cap Tool Kit

Parts / Kits	Cap		Tube holder E		Tube holder C		Tube setter (C) 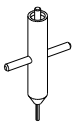		Hand Press 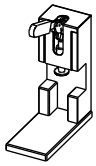	
	Part No./Name	Qty.	Part No./Name	Qty.	Part No./Name	Qty.	Part No./Name	Qty.	Part No./Name	Qty.
S308626A S-12AL Cap Tool Kit	S410542A S-12AL Cap	8	S411486 Tube holder E	1	S411487 Tube holder C	1	481056A Tube setter (C)	1	S204591B Hand Press	1
S308626B S-12AL Cap Tool Kit	S410542A S-12AL Cap	12	S411486 Tube holder E	1	S411487 Tube holder C	1	481056A Tube setter (C)	1	S204591B Hand Press	1
S308627A S-40AL Cap Tool Kit	S410532A S-40AL Cap	8	S411486 Tube holder E	1	---	--	481056A Tube setter (C)	1	S204591B Hand Press	1
S308627B S-40AL Cap Tool Kit	S410532A S-40AL Cap	12	S411486 Tube holder E	1	---	--	481056A Tube setter (C)	1	S204591B Hand Press	1

Appendix 3 The list of space caps

Select the correct space caps and correct float spacers to match the tubes and rotors to be used.

Applicable tubes	Space caps		Float spacer		Applicable rotors (Old models)
	Part No.	Name (color)	Part No.	Name (color)	
2PA Seal tube	S402631	Space cap (A) (blue)	-	-	(RP70VT)
4PA Seal tube	S407828	B5 Space cap (red)	S413975	B6.5-4 Float spacer (black)	P100AT2,P50AT4,
5PA Seal tube	484284	B Space cap (white)	-	-	(RPV65T)
	488101	B2 Space cap (black)	-	-	P100VT, P65VT2, P90NT, P65NT2, (P83VT), (P65VF),(P55VF2),(RP65AF), (SRP83VT), (RP65VF),(RP55VF2), (RP65VT2), (RP67VF), (RP85NT)
	S403331	B3 Space cap (white)	-	-	(RP50AT4), (SRP50AT)
	S407828	B5 Space cap (red)	S413975	B6.5-5 Float spacer (black)	P100AT2,P50AT4,
6PA Seal tube	486582	C2 Space cap (red)	S413977	C12-6 Float spacer (black)	P90AT,P80AT,P70AT2
6.5PA Seal tube	S407828	B5 Space cap (red)	-	-	P100AT2, P50AT4, (P100AT), (RP50AT4),(RP55), (SRP50AT), (RP40-3), (RP40-2)
8PA Seal tube	486582	C2 Space cap (red)	S413976	C12-8 Float spacer (black)	P90AT,P80AT,P70AT2
10PA Seal tube	S413981	D Space cap (black)	-	-	P40ST
12PA Seal tube	484285	C Space cap (white)	-	-	P65A, (P65AT), (RP65T), (RP65), (RP40), (RPW65T), (RPW45), (P55AT)
	486582	C2 Space cap (red)	-	-	P90AT, P80AT, P70AT2, (RP83T), (RP80T-3), (SRP70AT)
	486583	C3 Space cap (white)	-	-	(RPV45T)
	S402310	C4 Space cap (black)	-	-	P65VT3, P65NT, (RP55VF), (RP65VT3), (RP65NT)
15PA Seal tube	S413982	C6 Space cap (red)	-	-	P32ST2
20PA Seal tube	485649	E Space cap (red)	S413980	E40-20 Float spacer (black)	P70AT,P50AT2
30PA Seal tube	485649	E Space cap (red)	S413979	E40-30 Float spacer (black)	P70AT,P50AT2
33PA Seal tube	S413983	E4 Space cap (black)	-	-	P28S,P32ST
40PA Seal tube	485649	E Space cap (red)	-	-	P70AT, P50AT2, (P50A2), (P30A2), (RP70T), (RP50T-2), (RP50T),(RP50-2), (RP30-2), (RPW50T), (RP60T)
	484252	E2 Space cap (blue)	-	-	(RPV50T), (RPV30)
	S402525	E3 Space cap (white)	-	-	P50VT2, (RP50VF)
94PA Seal tube	S408969	F-Ti Space cap (red)	-	-	P45AT, (P42A), (RP45T), (RP42), (RPW35)

The tube sealer, model STF-1, model STF2, or model STF3, and the tube rack are necessary to seal the tube.

Applicable seal tubes	Tube racks	Part No.	Tube sealer			Remarks
			STF-1	STF2	STF3	
1.5PA Seal tubes	Tube rack (G2)	S201778G	○	○	○	
2PA Seal tubes	Tube rack (G)	S201778F				
3.5PA Seal tubes	Tube rack (B2)	S201778E				
4PA Seal tubes	Tube rack (B3)	S201778H				
5PA Seal tubes	Tube rack (B)	S201778A				
6PA Seal tubes	Tube rack (C4)	S206017A	×	○	○	
6.5PA Seal tubes	Tube rack (B4)	S201778J	○	○	○	
8PA Seal tubes	Tube rack (C2)	S201778L				
10PA Seal tubes	Tube rack (D)	S206017E	×	○	○	
12PA Seal tubes	Tube rack (C)	S201778B	○	○	○	
15PA Seal tubes	Tube rack (C3)	S206017F	×	○	○	
20PA Seal tubes	Tube rack (E4)	S206017C				
30PA Seal tubes	Tube rack (E3)	S206017B				
33PA Seal tubes	Tube rack (E2)	S206017D				
40PA Seal tubes	Tube rack (E)	S201778C	○	○	○	
94PA Seal tubes	Tube rack (F)	S201778D	○	×	×	
	Tube rack (F2)	S201778M	×	○	○	
2PA,4PA,5PA,6.5PA,12PA , and 40PA Seal tubes	Multi-rack	S201778K	○	○	○	Multi-rack can be used with 2PA,4PA,5PA,6.5PA, 12PA, and 40PA seal tubes only.

○ : Compatible × : Not compatible

Type of tube rack is stamped on top of the tube rack.
e.g.) In case of Tube rack (G), “G” is stamped on top of the tube rack.

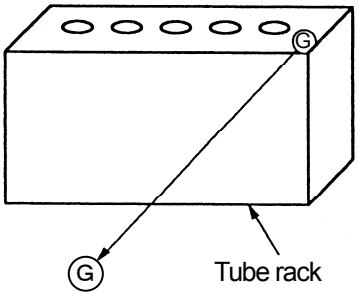

Appendix 4 Tightening tools of the cap

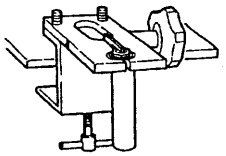

<Tube vise>

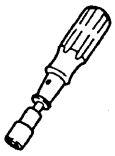

<Box wrench>

<Torque wrench>
#469283
#474871

<Torque wrench>
#477456A

Caps (tightening torque kg/cm)	Tool sets	Parts of the tool set		Applied rotors (Old models)
		Tube vises	Box wrenches Torque wrenches	
A3-AL Cap 336711A	----	S303696A Tube vise A2	S406641 Box wrench	
B-AL Cap 414429A	S300715A Tool set (B)	348253A Tube vise (B)	4361453 Box wrench	P50AT4, (RP50AT4), (SRP50AT)
	----	336662C Tube vise (B)	4361453 Box wrench	(For 5PET tube)
	S300716A Tool set (B2)	S300717A Tube vise (B2)	4361453 Box wrench	(RP30-3)
B2-AL Cap 474507A	-----	336662C Tube vise (B)	4361453 Box wrench	P50AT4, (RP50AT4) (For 6.5PET tube)
B-TI Cap 460696A	S300715A Tool set (B)	348253A Tube vise (B)	4361453 Box wrench	P100AT2, (P100AT), (RP80T)
B2-TI Cap 474070A (100)	----	336662A Tube vise (B)	469283 Torque wrench	(RPV65T)
C-AL Cap 441399A	S300713A Tool set (C)	S300714A Tube vise (C)	4361453 Box wrench	P65A, (P65AT), (P55AT), (RP65T), (RP65)
C4-AL Cap S407404A	----	333885B Tube vise (C2)	4361453 Box wrench	P65A, (P65AT), (P55AT), (For 12PET tube)
C-TI Cap 463577A(100)	341109A Tool set (C2)	333885A Tube vise (C2)	469283 Torque wrench	P90AT, P80AT, P70AT2, (SRP70AT), (RP83T), (RP80T-3)
C2-TI Cap 481649A (100)	----	333885B Tube vise (C2)	469283 Torque wrench	(RPV45T)
C-SST Cap 413312A	S300713A Tool set (C)	S300714A Tube vise (C)	4361453 Box wrench	P65A, (P65AT), (P55AT), (RP65T), (RP65)
E4-AL Cap S308090A (60)	339198A Tool set (E)	343417A Tube vise (E)	477456A Torque wrench	P70AT, P50AT2 (For 40PE tube)
E3-AL Cap S305231A (60)	339198A Tool set (E)	343417A Tube vise (E)	477456A Torque wrench	P70AT, (RP70AT), P50AT2, (RP50T-2), (RP50T), (RPW50T), (RP50-2), (P50A2), (P30A2), (RP30-2)
E2-AL Cap 331198A	339198A Tool set (E)	343417A Tube vise (E)	477456A Torque wrench	(RP30)
E-TI Cap 474272A (120)	----	338956A Tube vise	474871 Torque wrench	(P50VT), (RPV50T), (RPV30)
E-TI2 Cap 339673A (60)	339198A Tool set (E)	343417A Tube vise (E)	477456A Torque wrench	P70AT, (RP70T)
E-SST Cap 451480A	----	343417A Tube vise (E)	4361453 Box wrench	P70AT, P50AT2, (P50A2), (P30A2)
E2-SST Cap 418763A	----	343417A Tube vise (E)	4361453 Box wrench	
F-AL Cap 322690A (80)	339083A Tool set (F)	215786B Tube vise (F)	477456A Torque wrench	(RP21)
F2-AL Cap 325968A (80)	339082A Tool set (F2)	215786A Tube vise (F)	477456A Torque wrench	P45AT, (P42A)
F-SST Cap 418759A	----	215786B Tube vise (F)	4361453 Box wrench	(RP21)

Appendix 5 The list of bottles

Polypropylene copolymer

How to indicate Parts of bottles, Part No., and material

- The upper number is part No. The parts with ★ mark are 1 pc/set, and others are 10 pcs/set. If blank, the part is not provided.
- The lower letters indicate materials.

Material

PA: polypropylene copolymer
PP: polypropylene
PC: polycarbonate
NBR: nitrile-butadiene rubber
PPO: polyphenylene oxide
AL: aluminum alloy
POM: polyacetal

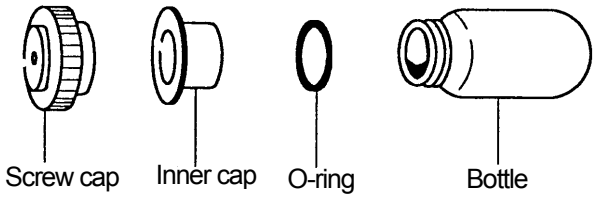

Vol. * (mL)	<Bottles> Part No. Name	Parts of bottles, Part No. and material				Applied rotors (old models)
		Screw cap	Inner cap	O-ring	Bottle	
10	334105A (10pcs/set) 10PA Bottle	S401802A PP	—	—	PA	P90AT, P80AT, P70AT2, (P65AT), (P55AT), (SRP70AT), (RP65T)
	325952A (10pcs/set) 10PC Bottle	S401802A PP	—	—	PC	P90AT, P80AT, P70AT2, (P65AT), (P55AT), (SRP70AT), (RP65T)
	S303922A (6pcs/set) 10PC Bottle (B)	474042A PPO	474043A PPO	474044A NBR	336626A PC	P90AT, P80AT, P70AT2, (P65AT), (P55AT), (SRP70AT), (RP65T)
30	330345A (10pcs/set) 30PA Bottle	S401789A PP	—	—	PA	P70AT, P50AT2, (P50A2), (RP70T), (RP50T-2), (RP50-2)
	S308133A (6pcs/set) 30PC Bottle (B3)	474035A PPO	474036A PPO	474037A NBR	S308134A PC	P70AT, P50AT2, (P50A2), (RP70T), (RP50T-2), (RP50-2)
	S308132A (6pcs/set) 30PC Bottle (C3)	485541★ AL	474036A PPO	474037A NBR	S308134A PC	P70AT, P50AT2, (P50A2), (RP70T), (RP50T-2), (RP50-2)
	S310626A (6pcs/set) 30PA Bottle (C)	485541★ AL	S413364A PP	474037A NBR	S310625A PA	P70AT, P50AT2
70	S308433A (6pcs/set) 70PC Bottle (B)	474039A PPO	474040A PPO	474041A NBR	S308431A PC	P45AT, (P42A), (RP45T), (RP42), (RPW35)
	S308405A (6pcs/set) 70PC Bottle (C)	486370★ AL	474040A PPO	474041A NBR	S308431A PC	P45AT
	S310331A (6pcs/set) 70PA Bottle (C)	486370★ AL	S413195A PP	474041A NBR	S310419A PA	P45AT
230	S413248B (2pcs/set) AL Cap (2) assy **	S310455★ AL	474555★ POM	474633★ NBR	—	P21A2
	S403617A (1pc/set) AL Cap assy **	S301384★ AL	S401808A POM	S401809A NBR	—	P19A, (RP19)

* Nominal capacity

** The caps for 230 PA bottles.

Appendix 6 The list of tube kits

● Open-top Tube Kit

Kits \ Parts	TUBE		CAP		PACKING for CAPS		TUBE VISE		WRENCH		TUBE SETTER	
	Part No./Name	**	Part No./Name	**	Part No./Name	**	Part No./Name	**	Part No./Name	**	Part No./Name	**
S304985A 6.5PA Tube Kit	329445A 6.5PA Tube	2 (100)	460696A B-TI Cap	8	S406626A	2 (20)	348253A Tube Vise (B)	1	4361453 Box wrench	1	435823A Tube Setter	1
S304986A 12PA Tube Kit (A)	329606A 12PA Tube	2 (100)	463577A C-TI Cap	12	S401803A	2 (20)	333885A Tube Vise (C2)	1	469283 Torque wrench	1	435823A Tube Setter	1
S304986B 12PA Tube Kit (B)	329606A 12PA Tube	2 (100)	441399A C-AL Cap	12	S401796A	2 (20)	S300714A Tube Vise (C)	1	4361453 Box wrench	1	435823A Tube Setter	1
S304987A 40PA Tube Kit (A)	329607A 40PA Tube	2 (100)	339673A E-TI2 Cap	8	S401787A	2 (20)	343417A Tube Vise (E)	1	*1	1set	435823A Tube Setter	1
S304987B 40PA Tube Kit (B)	329607A 40PA Tube	2 (100)	S305231A E3-AL Cap	12	S401787A	2 (20)	343417A Tube Vise (E)	1	*2	1set	435823A Tube Setter	1
S304988A 94PA Tube Kit	S304299A 94PA Tube	4 (100)	325968A F2-AL Cap	6	S401792A	1 (10)	215786A Tube Vise (F)	1	*1	1set	435823A Tube Setter	1

** Q'ty (pcs/box)

*1 477705 Torque Wrench ····· 1
477706 Socket Adapter ····· 1
483537A 19MM Socket ····· 1

*2 477705 Torque Wrench ····· 1
477706 Socket Adapter ····· 1
483539A 17MM Socket ····· 1

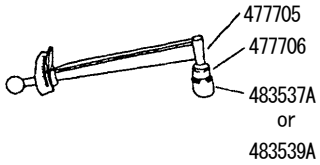

● Seal Tube Kit

Parts / Kits	SEAL TUBE		SPACE CAP		FLOAT SPACER		TUBE SETTER		TUBE SETTER	
	Part No. / Name	**	Part No. / Name	**	Part No. / Name	**	Part No. / Name	**	Part No. / Name	**
S304989A 5PA Seal Tube Kit (A)	345319A 5PA Seal Tube	2 (100)	488101 B2 – Space Cap	8			S407157 Tube Setter	1		
S304989B 5PA Seal Tube Kit (B)	345319A 5PA Seal Tube	2 (100)	488101 B2 - Space Cap	18			S407157 Tube Setter	1		
S304990A 6.5PA Seal Tube Kit (A)	S304238A 6.5PA Seal Tube	2 (100)	S407828 B5 - Space Cap	8			S407157 Tube Setter	1		
S304991A 12PA Seal Tube Kit (A)	345320A 12PA Seal Tube	2 (100)	486582 C2 - Space Cap	12			S407157 Tube Setter	1		
S304991B 12PA Seal Tube Kit (B)	345320A 12PA Seal Tube	2 (100)	484285 C - Space Cap	12			S407157 Tube Setter	1		
S304991C 12PA Seal Tube Kit (C)	345320A 12PA Seal Tube	2 (100)	S402310 C4 - Space Cap	10			S407157 Tube Setter	1		
S304991D 12PA Seal Tube Kit (D)	345320A 12PA Seal Tube	2 (100)	486582 C2 - Space Cap	8			S407157 Tube Setter	1		
S304992A 40PA Seal Tube Kit (A)	345321A 40PA Seal Tube	2 (100)	485649 E - Space Cap	12			S407157 Tube Setter	1		
S304992B 40PA Seal Tube Kit (B)	345321A 40PA Seal Tube	2 (100)	S402525 E3 - Space Cap	8			S407157 Tube Setter	1		
S304993A 94PA Seal Tube Kit (A)	S304301A 94PA Seal Tube	4 (100)	S408969 F - TI Space Cap	6			S407157 Tube Setter	1		
S311572A 4PA Seal Tube Kit (A)	S303694A 4PA Seal Tube	2 (100)	S407828 B5 - Space Cap	6			S407157 Tube Setter	1		
S311572B 4PA Seal Tube Kit (B)	S303694A 4PA Seal Tube	2 (100)	S407828 B5 - Space Cap	4	S413975 B6.5-4 Float Spacer	4	S407157 Tube Setter	1	435823A Tube Setter (B)	1
S304989E 5PA Seal Tube Kit (E)	345319A 5PA Seal Tube	2 (100)	S407828 B5 - Space Cap	4	S413974 B6.5-5 Float Spacer	4	S407157 Tube Setter	1		
S311557A 6PA Seal Tube Kit (A)	S311555A 6PA Seal Tube	2 (100)	486582 C2 - Space Cap	4	S413977 C12-6 Float Spacer	4	S407157 Tube Setter	1	435823A Tube Setter (B)	1
S311557B 6PA Seal Tube Kit (B)	S311555A 6PA Seal Tube	2 (100)	S408835 C5 - Space Cap	8	S413978 C8-6 Float Spacer	8	S407157 Tube Setter	1		
S311562A 8PA Seal Tube Kit (A)	S408831A 8PA Seal Tube	2 (100)	S408835 C5 - Space Cap	8			S407157 Tube Setter	1		
S311562B 8PA Seal Tube Kit (B)	S408831A 8PA Seal Tube	2 (100)	486582 C2 - Space Cap	4	S413976 C12-8 Float Spacer	4	S407157 Tube Setter	1	435823A Tube Setter (B)	1
S311532A 10PA Seal Tube Kit (A)	S311530A 10PA Seal Tube	2 (100)	S413981 D - Space Cap	6			S407157 Tube Setter	1		
S311535A 15PA Seal Tube Kit (A)	S311533A 15PA Seal Tube	2 (100)	S413982 C6 - Space Cap	6			S407157 Tube Setter	1		
S311571A 20PA Seal Tube Kit (A)	S311569A 20PA Seal Tube	2 (100)	485649 E - Space Cap	4	S413980 E40-20 Float Spacer	4	S407157 Tube Setter	1	435823A Tube Setter (B)	1
S311571B 20PA Seal Tube Kit (B)	S311569A 20PA Seal Tube	2 (100)	485649 E - Space Cap	6	S413979 E40-30 Float Spacer	6	S407157 Tube Setter	1	435823A Tube Setter (B)	1
S311570A 30PA Seal Tube Kit (A)	S311568A 30PA Seal Tube	2 (100)	485649 E - Space Cap	6			S407157 Tube Setter	1		
S311570B 30PA Seal Tube Kit (B)	S311568A 30PA Seal Tube	2 (100)	485649 E - Space Cap	4	S413979 E40-30 Float Spacer	4	S407157 Tube Setter	1	435823A Tube Setter (B)	1
S311546A 33PA Seal Tube Kit (A)	S311544A 33PA Seal Tube	2 (100)	S413983 E4 - Space Cap	6			S407157 Tube Setter	1		

** Q'ty (pcs/box)

The tube sealer, model STF-1, model STF2, or model STF3 and the tube rack are separately necessary for using seal tubes. See appendix 3 for the part No. of the tube rack.

● Applicable rotors

Applicable rotors of every tube kit are shown below.

● : Applicable

Kits \ Rotors	P100AT2 ,P100AT	P90AT	P80AT	P70AT2	P70AT	P65A	P50AT2	P50AT4	P45AT	P42A	P32AT	P28S	P32ST	P32ST2	P40ST	P90NT	P65NT	P65NT2	P100VT	P65VT3	P65VT2	P50VT2
S304985A 6.5PA Tube Kit	●																					
S304986A 12PA Tube Kit (A)		●	●	●																		
S304986B 12PA Tube Kit (B)						●					●											
S304987A 40PA Tube Kit (A)					●																	
S304987B 40PA Tube Kit (B)							●															
S304988A 94PA Tube Kit (A)									●	●												
S304989A 5 PA Seal Tube Kit (A)																●			●			
S304989B 5 PA Seal Tube Kit (B)																		●			●	
S304989E 5 PA Seal Tube Kit (E)	●							●														
S311572B 4 PA Seal Tube Kit (B)	●							●														
S304990A 6.5 PA Seal Tube Kit	●																					
S304991A 12 PA Seal Tube Kit (A)		●	●	●																		
S304991B 12 PA Seal Tube Kit (B)						●																
S304991C 12 PA Seal Tube Kit (C)																	●			●		
S311562B 8 PA Seal Tube Kit (B)		●	●	●																		
S311535A 15PA Seal Tube Kit (A)														●								
S311557A 6 PA Seal Tube Kit (A)		●	●	●																		
S311532A 10 PA Seal Tube Kit (A)															●							
S304992A 40 PA Seal Tube Kit (A)					●		●															
S304992B 40 PA Seal Tube Kit (B)																						●
S311546A 33 PA Seal Tube Kit (A)												●	●									
S311570B 30 PA Seal Tube Kit (B)					●		●															
S311571A 20 PA Seal Tube Kit (A)					●		●															
S304993A 94 PA Seal Tube Kit									●													

Decontamination

⚠ WARNING:

- If the centrifuge, rotor or an accessory is contaminated by samples that are toxic or radioactive, or blood samples that are pathogenic or infectious, be sure to decontaminate the item according to good laboratory procedures and methods.
- If there is a possibility that the rotor or an accessory is contaminated by samples that might impair human health (for example, samples that are toxic or radioactive, or blood samples that are pathogenic or infectious), it is your responsibility to sterilize or decontaminate the rotor or the accessory properly before requesting repairs from an authorized sales or service representative. Note that we cannot repair the centrifuge, rotor or the accessory unless sterilization or decontamination is completed.
- It is your responsibility to sterilize and/or decontaminate the rotor or parts properly before returning them to an authorized sales or service representative. In such cases, copy the attached decontamination sheet and fill out the copied sheet, then attach it to the item to be returned.
  We may ask you about the treatment for the rotor or parts if the decontamination is checked and judged as insufficient by us. It is your responsibility to bear the cost of sterilization or decontamination. Note that we cannot repair or inspect the rotor or the accessory unless sterilization or decontamination is completed.

Rotor retirement

After many years of use, there will be inevitably some corrosion or stress corrosion. At some points, the combination of such damage and metal fatigue could make the rotor vulnerable to a failure.
Although a rotor may appear to be in a good condition, you should follow the rotor retirement recommendation shown below.

Rotor	Material	Retire After Years
Angle rotor Vertical rotor	Titanium alloy	12
	Aluminum alloy	10
Swing rotor	Titanium alloy Aluminum alloy	10
Zonal rotor	Titanium alloy	10
Continuous flow rotor	Titanium alloy	10

MEMO

Eppendorf Himac Technologies Co., Ltd.

1060, Takeda, Hitachinaka City
Ibaraki Pref., 312-8502 Japan

URL: https://www.himac-science.com