Corning® Lambda™ Plus Pipettors

Single-channel, 8-channel, and 12-channel Pipettors

Instruction Manual

Table of Contents

1. Product Description 1
2. Packaging 4
3. Setting the Volume 5
4. Aspiration and Dispensing Instructions 6
5. Pre-rinsing 8
6. Dense and Viscous Liquids 8
7. Corning® Pipet Tips 9
8. Recommendations 9
9. Recalibration 10
10. Troubleshooting 13
11. Cleaning and Sterilization 15
12. Spare Parts 16
13. Limited Warranty 17

1. Product Description

The Corning® Lambda™ Plus single-channel pipettor is a volumetric instrument designed to measure and transfer liquids precisely and safely. It can accommodate volumes from 0.1 µL to 1,000 µL depending on the model.

Corning Lambda Plus 8-channel and 12-channel pipettors have been designed for microplate filling. The pipettors enable precise and simultaneous delivery of 8 or 12 preset volume doses of liquid. These pipettors are produced in four volume ranges: 0.5 to 10 µL, 5 to 50 µL, 20 to 200 µL, 50 to 300 µL.

Model Volume Range (µL)	Application
2, 10	Measurement and transfer of micro-volumes, DNA sequencing, and enzyme assay applications.
20, 50, 100, 200, 300, 1,000	Measurement and transfer of general aqueous solution, acids, and bases.

The single-, 8-, and 12-channel pipettors feature a digital counter which shows the pipetting volume. The set volume is visible in the window on the handle. Volumes are set by either turning the pipetting pushbutton (A1) or the adjustment knob (B) in the correct direction.

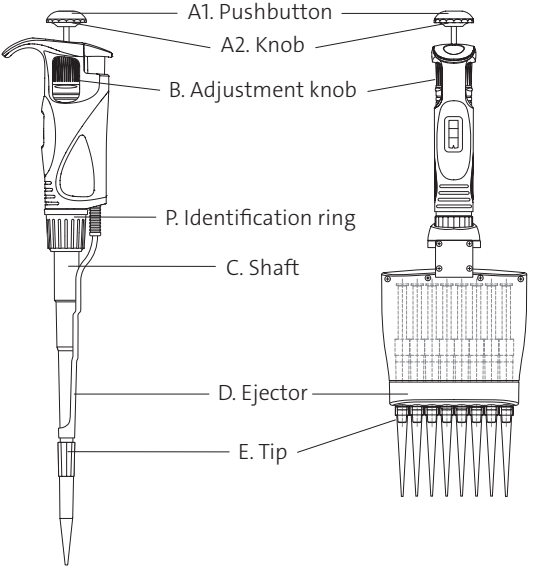

The pipettor design allows the user to lock the volume setting by sliding the locking ring upwards.

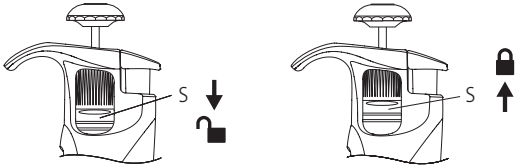

The symbols printed on the handle show locked and unlocked positions. The volume range of each pipettor model is shown on the pipetting pushbutton (A1).

Liquids are aspirated into disposable pipet tips attached to the pipettor shaft. Disposable pipet tips ensure maximum safety and eliminate the possibility of cross-contamination of the liquid samples. To protect the user from contaminated pipet tips, the pipettor is fitted with a built-in tip ejector (D).

Single-channel Pipettor Ejector

The ejector length can be adjusted to accommodate all common brands of pipet tips. When using narrow tubes, it may be necessary to remove the tip ejector. This is done simply by pulling down.

Adjusting the Tip Ejector Length

2 to 1,000 µL Pipettors

The "H" spacers included with each pipettor, allow the ejector length to be adjusted by +1 mm or +2 mm.

An "H0" spacer is fitted as standard. The outside shape of the spacer identifies the adjustment.

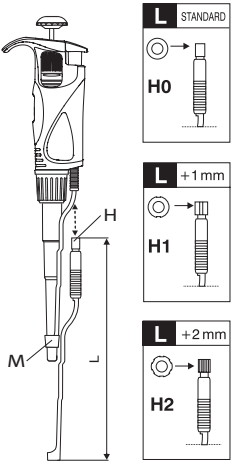

2 and 10 µL Pipettors

The 2 µL to 10 µL pipettors may require the use of an ejector cap "M" to efficiently eject certain brands of pipet tips. Simply place the cap (supplied with the pipettor) on the bottom of the pipettor shaft and slide the cap upwards until it surrounds the bottom of the tip ejector.

Nominal Volume (µL)	Cat. No.	Volume (µL)		Accuracy (%)	Precision (%)	Fit to Tips Without Filter (µL)
Single-channel Pipettors						
2	4070	Min.	0.1	±40.0	≤12.0	10
			1	±2.7	≤1.30	
		Max.	2	±1.5	≤0.70	
10	4071	Min.	0.5	±4.0	≤2.80	10
			5	±1.0	≤0.60	
		Max.	10	±0.5	≤0.40	
20	4072	Min.	2	±3.0	≤1.50	200
			10	±1.0	≤0.50	
		Max.	20	±0.8	≤0.30	
100	4073	Min.	10	±1.6	≤0.80	200
			50	±0.8	≤0.24	
		Max.	100	±0.8	≤0.20	
200	4074	Min.	20	±1.2	≤0.60	200
			100	±0.8	≤0.25	
		Max.	200	±0.6	≤0.20	
1,000	4075	Min.	100	±1.6	≤0.40	1,000
			500	±0.7	≤0.20	
		Max.	1,000	±0.6	≤0.15	

The accuracy and precision are obtained gravimetrically using Corning® pipet tips, performing at least 10 measurements of distilled water at a reference temperature of 20°C ± 1°C according to EN ISO 8655 standard.

8-channel and 12-channel Pipettor Ejector

The 8- and 12-channel pipettor construction allows the lower 8- and 12-channel modules to be rotated 360°. This allows the user to disable the ejector to avoid accidental use and to change its position to make filling of microplates more comfortable and convenient. It is recommended to turn the module clockwise.

The pipettor is a high quality instrument which offers excellent accuracy and precision.

The accuracy and precision (repeatability) of the liquid volume depends on the quality of pipet tips used. The values for accuracy and precision shown in the table below were obtained using Corning pipet tips.

Nominal Volume (µL)	Cat. No.	Volume (µL)		Accuracy (%)	Precision (%)	Fit to Tips Without Filter (µL)
8-channel and 12-channel Pipettors						
8 - 10 12 - 10	4080 4084	Min.	0.5	±10.0	≤8.0	10
			5	±4.0	≤2.0	
		Max.	10	±2.0	≤1.2	
8 - 50 12 - 50	4081 4085	Min.	5	±4.0	≤2.5	200
			25	±3.0	≤1.2	
		Max.	50	±1.6	≤0.6	
8 - 200 12 - 200	4082 4086	Min.	20	±3.0	≤1.5	200
			100	±1.5	≤0.8	
		Max.	200	±1.0	≤0.6	
8 - 300 12 - 300	4083 4087	Min.	50	±1.6	≤1.5	300
			150	±1.2	≤1.0	
		Max.	300	±1.0	≤0.6	

- Accuracy is the difference between the volume dispensed and the test volume selected.
- Precision is the degree to which repeated measurements under unchanged conditions show the same results.

The accuracy and precision are obtained gravimetrically using Corning® pipet tips, performing at least 10 measurements of distilled water at a reference temperature of 20°C ± 1°C according to EN ISO 8655 standard.

2. Packaging

The following components are supplied with the pipettor:

- Instruction manual
- Calibration key
- Ejector length adjustment spacers (for single-channel pipettors)
- Ejector cap (for single-channel pipettor models 2 and 10)
- Identification labels
- Lubricant (for single-channel pipettors)
- Color identification rings (for single-channel pipettors).

3. Setting the Volume

The volume of the pipettor is set by turning the pipetting pushbutton (A2) or the black adjustment knob (B).

The volume display consists of three numbers and is read from top to bottom. The three numbers indicate the volume selected and are colored black and red.

Red numbers represent decimal fractions for microvolume pipettors or milliliters for macrovolume pipettors.

An example for each of these pipettors is given on the next page.

Nominal Volume (µL)	Counter Readings	Set Volume	Increment
Single-channel Pipettors			
2	1 2 5	1.25 µL	0.002 µL
10	0 7 5	7.5 µL	0.02 µL
20	1 2 5	12.5 µL	0.02 µL
100	0 7 5	75.0 µL	0.2 µL
200	1 2 5	125.0 µL	0.2 µL
1,000	0 7 5	750.0 µL	2 µL
8-channel and 12-channel Pipettors			
8 - 10 12 - 10	0 3 5	3.5 µL	0.02 µL
8 - 50 12 - 50	0 6 5	6.5 µL	0.10 µL

Nominal Volume (µL)	Counter Readings	Set Volume	Increment
8-channel and 12-channel Pipettors (continued)			
8 - 200 12 - 200	0 8 5	85.0 µL	0.20 µL
8 - 300 12 - 300	2 5 0	250.0 µL	1.0 µL

To attain the maximum accuracy, the set volume must be approached from a higher value.

If the desired value is lower than the previous value, adjust the value down to a one-third turn above the required setting. If the desired value is higher than the previous value, adjust the value to a one-third turn above the required value. The setting should then be performed in the following manner:

- Slowly turn the pipetting pushbutton or the black adjustment knob to the required volume.
- If the knob is accidentally turned too far below the required value, the process must be repeated.
- Set the locking ring into the upper position following the volume adjustment, thus locking the knob and preventing accidental volume change.

4. Aspiration and Dispensing Instructions

Single-channel Pipettors

Place a pipet tip on the shaft of the pipettor. See Section 6 for the appropriate tip. Press the pipet tip on firmly using a slight twisting motion. This will ensure an airtight seal.

8-channel and 12-channel Pipettors

To put pipet tips on the shafts: hold the pipettor vertically and press it against the tips in the rack box until the shafts retract approximately 1.5 mm into the manifold. The suspension system of the shafts ensures even and tight sealing of the pipet tips. The rocking movement does not have to be performed to seal the pipet tips tightly.

NOTE: Never handle a liquid with a pipettor which has not been fitted with a pipet tip.

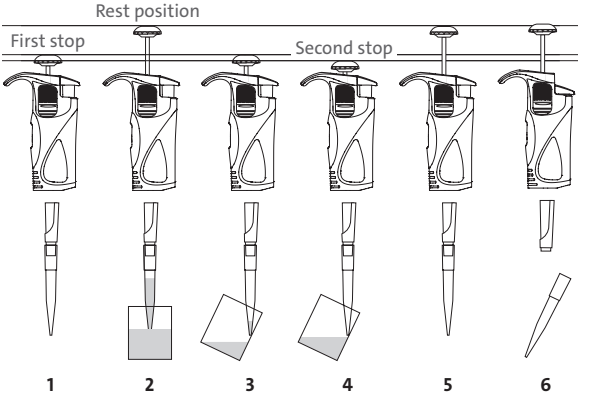

Aspiration

1. Press the pushbutton to the first positive stop. Holding the pipettor vertically, immerse the pipet tip into the sample liquid. The depth to which the pipet tip is immersed in the sample liquid depends on the model.

Model Volume Range (µL)	Immersion Depth (mm)
2, 10	≤1
20, 50, 100	2 - 3
200, 1,000	2 - 4

2. Release the pipetting pushbutton slowly and smoothly to aspirate the sample. Wait one second and then withdraw the pipet tip from the liquid. If the pipet tip is not immersed to the recommended depth or if the pipetting pushbutton is rapidly released, air may enter the disposable pipet tip.

   NOTE: Avoid touching the orifice of the pipet tip.

Dispensing

3. Place the end of the pipet tip against the inside wall of the vessel at an angle of 10° to 40°. Press the pushbutton smoothly to the first stop. Wait one second.
4. Press the pushbutton to the second stop to expel any remaining liquid. Keep the pushbutton depressed to the very end, and remove the pipettor by drawing the pipet tip against the inside surface of the receiving vessel.
5. Release the pushbutton to its starting position.
6. Eject the pipet tip by pressing the tip ejector button. Remember to change the pipet tip whenever a different type of liquid is to be sampled.

5. Pre-rinsing

When pipetting liquids of higher viscosity or lower surface tension than water (e.g., sera or organic solvents), a film of liquid is formed on the inside wall of the pipet tip. This film can create an error. As the film remains relatively constant in successive pipetting operations with the same tip, this error can be eliminated by forming the film before transferring the first sample. This is done by aspirating a sample and dispensing it back into the same vessel. Now, as the film is already formed, all of the following samples will have better accuracy and repeatability.

This pre-rinsing operation should be repeated when the volume to be aspirated is changed or when a new pipet tip is used.

6. Dense and Viscous Liquids

The pipettor's specifications of accuracy and precision are based on pipetting distilled water. Handling of liquids with physical qualities of density, viscosity, and surface tension which differ substantially from water may need to be gravimetrically checked for compensation of the volume setting. Normally the degree of error resulting from heavy or viscous liquids is negligible if pipetting is done slowly and carefully. It is most important to give the liquids some time to react to the change of pressure by holding the pipet tip in its position for at least 2 seconds after the aspiration and the blow out stroke.

If in extreme cases, this method of operation does not result in accurate values, compensation may be achieved as follows:

- Weigh the pipetted liquid when the pipettor is set to the nominal value. Then calculate the set-off from the nominal value:

  Correction, value = 2 x nominal val. $\frac{m}{\gamma}$

  m = weight of the sample

  γ = density of liquid
- Check this operation once again and correct if necessary. Note the corrected value for further pipetting of the same kind of liquid.

7. Corning® Pipet Tips

Corning DeckWorks pipet tips are made from high performance polypropylene and their quality ensures the precision and accuracy associated with the pipettor. Strict control is maintained throughout the manufacturing process to ensure the highest quality.

The accuracy and precision figures for the pipettors are only guaranteed when Corning pipet tips are used. The use of inferior quality tips will seriously degrade the performance of the pipettor.

Refer to Pages 3 and 4 for information on proper pipet tips sizes, accuracy, and precision values.

8. Recommendations

Observing the following recommendations will ensure maximum possible accuracy and precision of liquid sampling.

- Make sure to operate the pipettor slowly and smoothly.
- The depth of immersion in the sample liquid should be the minimum necessary and should remain constant during aspiration.
- The pipettor should be held in a vertical position.
- Change the pipet tip when volume setting is changed or when a different liquid is to be aspirated.
- Change the pipet tip if a droplet remains on the end of the tip from the previous pipetting operation.
- Each new pipet tip should be pre-rinsed with the liquid to be pipetted.
- Liquid should never enter the pipettor shaft. To prevent this:
  - Press and release the pushbutton slowly and smoothly.
  - Never turn the pipettor upside down.
  - Never lay the pipettor on its side when there is liquid in the tip.
- Never force the volume setting beyond its recommended limits.
- When pipetting liquids with temperatures different from the ambient temperature, it is recommended to pre-rinse the tip several times before use.
- Do not pipette liquids with temperatures above 70°C.
- When pipetting acids or corrosive solutions which emit vapors, it is recommended to disassemble the shaft and rinse the piston and seal with distilled water after finishing the pipetting operation.

9. Recalibration

The accuracy and precision of the pipettors are obtained gravimetrically using Corning® pipet tips, performing at least 10 measurements of distilled water according to EN ISO 8655 standard.

If during pipettor operation you find that the accuracy error (the difference between the real aspirated volume and the preset volume) exceeds the permissible value given in the table in Section 1, the pipettor recalibration procedure should be carried out.

Before starting the recalibration it is necessary to check whether the following requirements have been met during error determination:

- Ambient temperature and the temperature of the pipettor, pipet tips, and water were identical.
- Density of the liquid used is close to that of distilled water.
- Balance with appropriate sensitivity has been used.
- Conversion factor mg/µL has been taken into account.
- The requirements shown in Sections 3 and 7 have been met.

Volume Checked (µL)	Balance Sensitivity (mg)
0.1 - 10	≤0.001
10 - 100	≤0.01
>100	≤0.1

If the above conditions are satisfied and the accuracy error for selected volume given in Section 1 exceeds the permissible value, the pipettor recalibration procedure should be continued.

The recalibration can be performed within one full turn of the calibration key to the right or to the left only.

Recalibration Conditions

Ambient temperature and the temperature of the pipettor, pipet tips, and liquid should be within the range of 20°C to 25°C and stabilized during weighing within ±0.5°C.

- Measurements should be conducted using distilled water.
- Balance sensitivity should be suitable for the volume to be measured.

Recalibration Procedure

- Set the dose volume depending on the pipettor volume according to the following tables:

Nominal Volume (µL)	Range of Pipettor Volumes (µL)	Preset Volume (µL)	Permissible Volumes (µL)	Volume Change ΔV for Full Turn of the Calibration Key (24 Increments) (µL)
Single-channel Pipettors				
2	0.1 - 2	0.2	0.176 - 0.224	0.06
10	0.5 - 10	0.5	0.48 - 0.52	0.33
20	2 - 20	2	1.94 - 2.06	0.63
100	10 - 100	10	9.84 - 10.16	2.50
200	20 - 200	20	19.76 - 20.24	6.30
1,000	100 - 1,000	100	98.4 - 101.6	25.00
8-channel and 12-channel Pipettors				
8 - 10 12 - 10	0.5 - 10	1	0.92 - 1.08	0.33
8 - 50 12 - 50	5 - 50	5	4.8 - 5.2	1.67
8 - 200 12 - 200	20 - 200	20	19.4 - 20.6	6.30
8 - 300 12 - 300	50 - 300	50	49.2 - 50.8	10.00

- Perform 5 aspirations, weigh each one, and calculate the average value of the aspirations.
- Perform 3 aspiration series (each series should include the aspirations from all channels), weigh each time, and calculate the average value of the aspirations.
- Calculate average aspirated volume in µL multiplying the average aspiration amount [mg] by the distilled water density coefficient [µL/mg], which depends on temperature and pressure according to the following table.

Temperature (°C)	Pressure (kPa)		
	95.0	101.3	105.0
20	1.0028	1.0029	1.0029
21	1.0030	1.0031	1.0031
22	1.0032	1.0033	1.0033
23	1.0034	1.0035	1.0036
24	1.0037	1.0038	1.0038
25	1.0039	1.0040	1.0040

If the average aspirated volume exceeds the permissible value, the following should be performed:

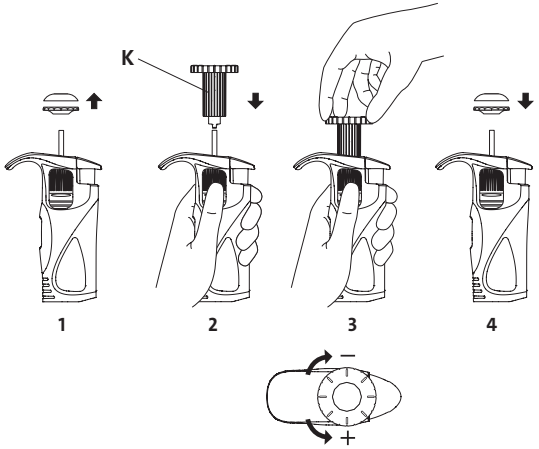

1. Remove the pipetting pushbutton.
   WARNING: The pipetting pushbutton consists of 2 parts: the lower volume-setting section (A2) and the upper button (A1). After removal of the pushbutton, both parts will separate.
2. Holding the volume setting knob to protect it against rotation, insert the calibration key (K) into the cuts of the calibration screw.
3. Turn the calibration key clockwise to reduce the aspirated volume, or counterclockwise to increase the volume. One full turn of the calibration key changes the pipettor aspiration volume by the amount given in the table.
4. Take out the calibration key and fix the pipetting pushbutton. The pipetting pushbutton should be fixed by placing the lower section on the arbor first (A2) and then the button (A1).

Determine the average aspirated volume. The average volume should be within the permissible range shown in the table. If the volume exceeds the values stated, the recalibration procedure should be repeated.

When pipetting liquids with physical properties that are considerably different from those of water, follow the instructions as described in Section 5.

10. Troubleshooting

If you notice an improper pipettor operation, identify the cause and eliminate the fault. Follow the instructions in the sequence provided. Replacement of parts should be required only occasionally and should not occur under normal pipettor use.

Problem	Cause	Solution
Droplets of liquid remain in the pipet tip.	The pipet tip is emptied too fast.	Decrease the speed of pressing the pipettor pushbutton.
		Press the pushbutton to the second stop to expel all the droplets.
	The pipet tip wettability has increased due to extensive use.	Replace the tip with a new one.
Droplets of air appear in the liquid aspirated into the pipet tip.	The pipet tip immersion is too shallow.	Immerse the tip deeper according to the instructions.
	The pipet tip is incorrectly pressed onto the pipettor shaft.	Press the pipettor firmly.
	The tip is damaged or worn out due to extensive use.	Replace the tip with a new one.
The pipettor incorrectly aspirates the liquid or the liquid drops out from the tip.	The pipet tip is incorrectly pressed onto the pipettor shaft.	Press the pipet tip firmly.
The pipettor incorrectly aspirates the liquid or the liquid drops out from the tip.	The shaft nut is loose in the single-channel pipettors 2 µL to 1,000 µL.	Tighten the shaft nut.
	The sealing surface of the shaft is cracked or scored.	Remove the tip ejector. Unscrew the shaft nut and inspect the shaft and the piston assembly. Replace the damaged parts. When reassembling the pipettor, the nut should be hand-tightened. In the single-channel pipettor model, the damage of the shaft may also cause a damage of the piston assembly. Replace the damaged parts. When reassembling the pipettor, the nut should be hand-tightened.

Problem	Cause	Solution
The pipettor incorrectly aspirates the liquid or liquid drops out from the pipet tip.	Damage to the piston or seal due to prolonged use with chemically aggressive liquids.	Replace the piston, seal, and O-ring. Rinse the inside of the shaft in distilled water and dry. Lubricate the seal and O-ring with the lubricant which has been included with each pipettor. The replacement of the piston requires conducting the calibration procedure. **NOTE:** The parts of the single-channel (2 µL and 10 µL) pipettors should be lubricated evenly with a minimum amount of lubricant.
	The pipettor is reassembled improperly.	Disassemble the pipettor and reassemble it, observing the proper sequence of steps.
	No lubricant on the sealing elements.	Remove the tip ejector. Unscrew the shaft nut and remove the shaft, piston assembly, seal, and O-ring. Rinse the removed parts in distilled water and dry thoroughly. Lightly lubricate the inside surfaces of the seal and the O-ring with the included lubricant. Reassemble the pipettor in the reverse order.
	Contamination of the inside of the pipettor caused by extensive aspiration of chemically aggressive liquids or because liquid got inside the pipettor.	Contamination of the inside of the pipettor caused by extensive aspiration of chemically aggressive liquids or because liquid got inside the pipettor.

If the problem continues after carrying out the above steps, contact your Corning representative.

Before returning the pipettor, please ensure the pipettor is completely free of any chemical, radioactive, or microbiological contamination which could pose a threat during transport and repair.

11. Cleaning and Sterilization

Cleaning

External surfaces of the pipetting pushbutton, the ejector pushbutton, the handgrip, the shaft nut, and the adjustment knob may be cleaned using a cloth dampened in isopropyl alcohol. The remaining parts removed from the pipettor during pipettor disassembly may be washed with distilled water or isopropyl alcohol.

WARNING: Before using cleaning agents other than those recommended by the manufacturer, check the compatibility charts and consider chemical resistance of the following plastics: PEI, PP, PC, POM, PA, PPS, PVDF used to produce the pipettor parts.

Sterilization

The pipettor can be sterilized in an autoclave at 121°C for 20 minutes. After sterilization, the pipettor should be dried and cooled to room temperature. It is recommended to:

- Unscrew the shaft nut slightly prior to sterilization and re-tighten after autoclaving.
- Set the locking ring in lower (unlocked) position prior to sterilization.
- Sterilize the pipettors in autoclave with an initial vacuum and drying cycle.

The precision of the results should not alter if the pipetting process and autoclaving are carried out as described in this manual. Because a slight change in the accuracy of the dosage may occur, it is recommended to:

- Check the calibration of the pipettor after the initial first, third, and fifth autoclaving cycles and then after every 10 autoclaving cycles.

Ultra Violet (UV) Sterilization

The pipettors are UV-resistant. However, the recommended distance from the radiation source to the exposed element should be not less than 50 cm. Prolonged and very intense UV exposure can cause decoloration of pipettor parts without effecting their performance.

12. Spare Parts

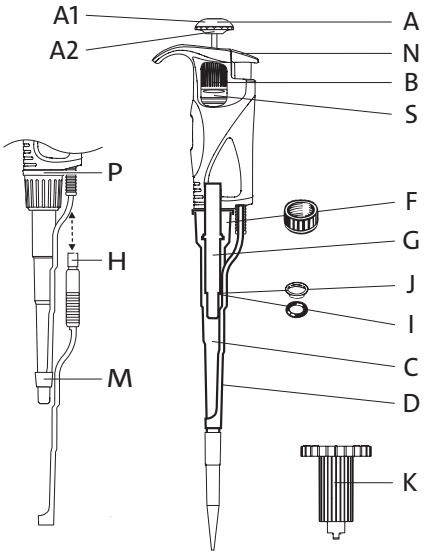

A: Pipetting pushbutton A1: Pushbutton A2: Knob
B: Adjustment knob
C: Shaft
D: Ejector
F: Shaft nut
G: Piston assembly
H: Spacer
I: O-ring
J: Seal
K: Calibration key
M: Ejector cap
N: Ejector pushbutton
P: Identification ring
S: Locking ring

Please contact Corning Customer Service to inquire about availability of spare parts. Pipettor model and name of the part required should be specified.

The replacement of the plunger requires conducting the calibration procedure according to Section 9.

To find your nearest service center and for scientific support, visit www.corning.com/lifesciences.

13. Limited Warranty

Corning Incorporated (Corning) warrants that this product will be free from defects in material and workmanship for a period of three (3) years from date of purchase. CORNING DISCLAIMS ALL OTHER WARRANTIES WHETHER EXPRESSED OR IMPLIED, INCLUDING ANY IMPLIED WARRANTIES OF MERCHANTABILITY OR OF FITNESS FOR A PARTICULAR PURPOSE. Corning's sole obligation shall be to repair or replace, at its option, any product or part thereof that proves defective in material or workmanship within the warranty period, provided the purchaser notifies Corning of any such defect. Corning is not liable for any incidental or consequential damages, commercial loss, or any other damages from the use of this product.

This warranty is valid only if the product is used for its intended purpose and within the guidelines specified in the supplied instruction manual. This warranty does not cover damage caused by accident, neglect, misuse, improper service, natural forces, or other causes not arising from defects in original material or workmanship. This warranty does not cover the PTFE seal, O-ring, or shaft. Claims for transit damage should be filed with the transportation carrier.

In the event this product fails within the specified period of time because of a defect in material or workmanship, contact Corning Customer Service at: USA/Canada 1.800.492.1110, outside the U.S. +1.978.442.2200, visit www.corning.com/lifesciences, or contact your local support office.

Corning Customer Service will help arrange local service where available or coordinate a return authorization number and shipping instructions. Products received without proper authorization will be returned. All items returned for service should be sent postage prepaid in the original packaging or other suitable carton, padded to avoid damage. Corning will not be responsible for damage incurred by improper packaging. Corning may elect for onsite service for larger equipment.

Some states do not allow limitation on the length of implied warranties or the exclusion or limitation of incidental or consequential damages. This warranty gives you specific legal rights. You may have other rights which vary from state to state.

No individual may accept for, or on behalf of Corning, any other obligation of liability, or extend the period of this warranty.

For your reference, make a note of the model number, serial number, date of purchase, and supplier here.

Model No. _____

Serial No. _____

Date Purchased _____

Supplier _____

Warranty/Disclaimer: Unless otherwise specified, all products are for research use or general laboratory use only.* Not intended for use in diagnostic or therapeutic procedures. Not for use in humans. These products are not intended to mitigate the presence of microorganisms on surfaces or in the environment, where such organisms can be deleterious to humans or the environment. Corning Life Sciences makes no claims regarding the performance of these products for clinical or diagnostic applications.
*For a listing of US medical devices, regulatory classifications or specific information on claims, visit www.corning.com/resources.

CORNING

Corning Incorporated
Life Sciences
www.corning.com/lifesciences

NORTH AMERICA
t 800.492.1110
t 978.442.2200

ASIA/PACIFIC

Australia/New Zealand
t 61 427286832

Chinese Mainland
t 86 21 3338 4338

India
t 91 124 4604000

Japan
t 81 3-3586 1996

Korea
t 82 2-796-9500

Singapore
t 65 6572-9740

Taiwan
t 886 2-2716-0338

EUROPE
CSEurope@corning.com

France
t 0800 916 882

Germany
t 0800 101 1153

The Netherlands
t 20 655 79 28

United Kingdom
t 0800 376 8660

All Other European Countries
t +31 (0) 206 59 60 51

LATIN AMERICA
grupoLA@corning.com

Brasil
t 55 (11) 3089-7400

Mexico
t (52-81) 8158-8400

For a listing of trademarks, visit www.corning.com/clstrademarks.
All other trademarks are the property of their respective owners.

© 2022 Corning Incorporated. All rights reserved.
3/22 CLS-LH-353DOC REV1