Rev. No	Revision Note

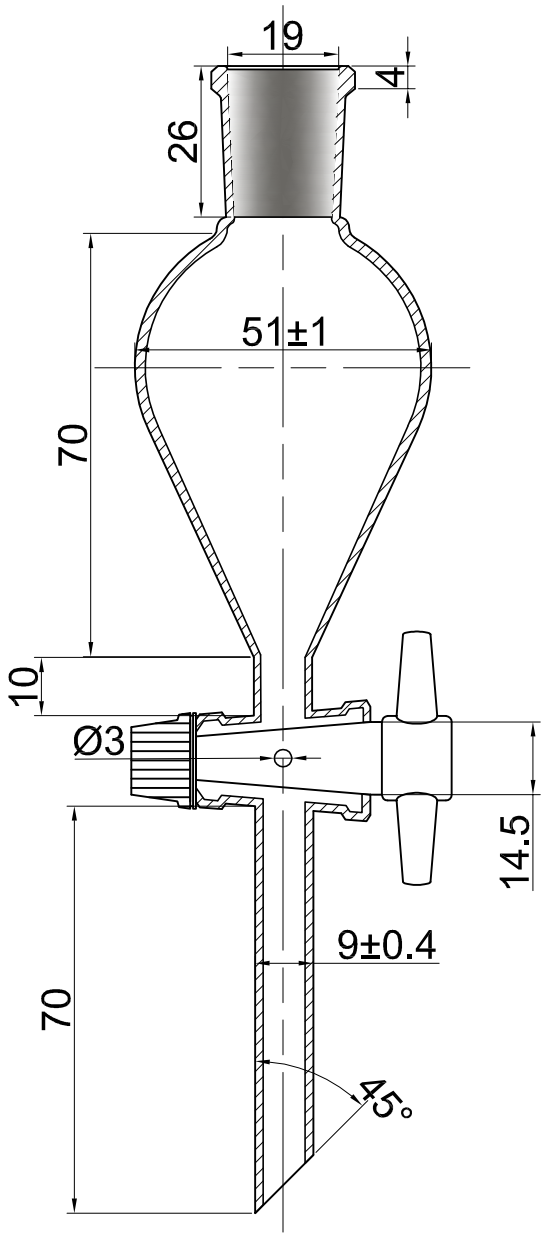

ISOLAB

Material	Density	Weight	Picture No	
Boro 3.3	2.23 g/cm³		Department	NO
			Glass Production	043.05.050

		Date	Name
Drawn by		26.10.2006	E. Muller
Checked by			
Approved by			
Rev. No	Date	Checked by	Approved by

mm.

Product Name: SEPARATING FUNNEL CONICAL (50ml)

Standard	Scale	Page No:	
DIN 12 451	1:1.2	001	A4
DIN 12 242			