IKA

designed for scientists

IKA MultiDrive basic
IKA MultiDrive control

ENGLISH

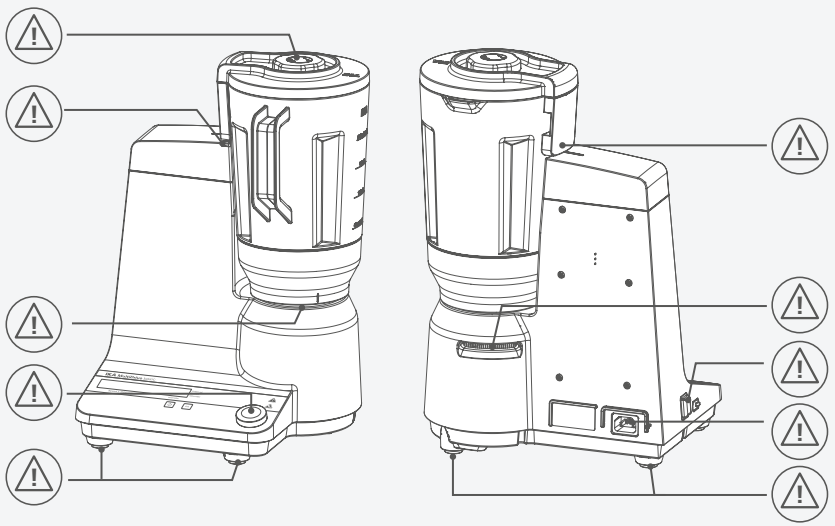

Fig. 1

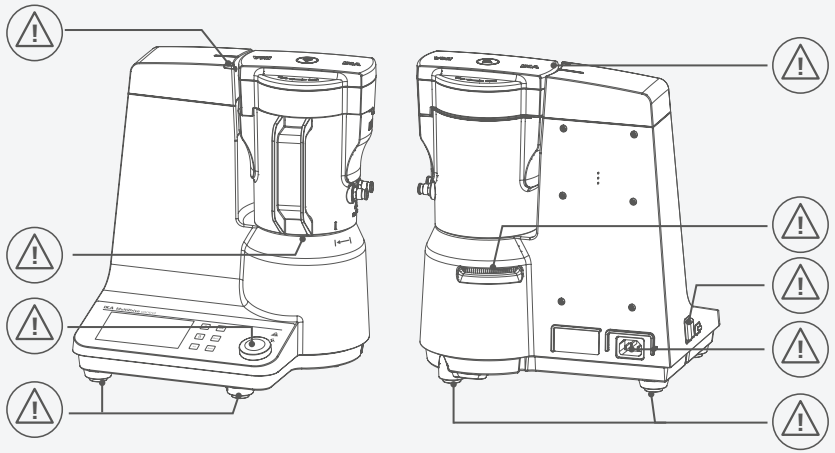

Fig. 2

EU Declaration of conformity 6

Explication of warning symbols 6

Safety instructions 7

Intended use 10

Useful information 11

Unpacking 14

Operator panel and display 16

Installation 19

Operation 21

Menu navigation and structure (MultiDrive contro) 29

Error message and troubleshooting 35

Maintenance and cleaning 36

Interfaces and outputs 37

Accessories 39

Technical Data 40

Warranty 41

EU Declaration of conformity

We declare under our sole responsibility that this product corresponds to the directives 2014/35/EU, 2006/42/EC, 2014/30/EU and 2011/65EUand conforms with the following standards or normative documents: EN 61010-1, EN 61010-2-051, EN ISO 12100, EN 61326-1 and EN 60529.

A copy of the complete EU Declaration of conformity can be requested at sales@ika.com.

Explication of warning symbols

/// Warning symbols

Danger! Indicates an (extremely) hazardous situation, which, if not avoided, will result in death, serious injury.

Warning! Indicates a hazardous situation, which, if not avoided, can result in death, serious injury.

Caution! Indicates a potentially hazardous situation, which, if not avoided, can result in injury.

Notice! Indicates practices which, if not avoided, can result in equipment damage.

/// General Symbols

A— Position number

Correct/Result
Shows the correct execution or the result of an action step.

Wrong
Shows the incorrect execution of an action step.

Note
Displays action steps that require particular attention to detail.

Safety instructions

/// General information

- **Read the operating instructions completely before starting up and follow the safety instructions.**
- Keep the operating instructions in a place where it can be accessed by everyone.
- Ensure that only trained staff work with the device.
- Follow the safety instructions, guidelines, occupational health and safety and accident prevention regulations.
- The device must only be used in a technically perfect condition.

Caution!
- Wear your personal protective equipment in accordance with the hazard category of the medium to be processed, there is a risk of:
  - splashing of liquids
  - body parts, hair, clothing and jewellery getting caught
  - sharp blade edges.

Notice!
- Pay attention to the marked sites in Fig. 1 and Fig. 2.

/// Device setup

Caution!
- The power switch of the device must be accessed immediately, directly and without risk at any time. If access to the power switch cannot be ensured, an additional emergency stop switch that can be easily accessed must be installed in the work area.

Notice!
- Weighing sensor integrated into the feet of **MultiDrive control**. Unpack and set up carefully.
- Set up the device in a spacious area on an even, stable, clean, non-slip, dry and fireproof surface.
- Make sure that the ventilation slits are not blocked at back of the device.
- Ensure that the vessel and the cover is firmly attached to the drive unit prior to operating the device.
- The drive unit cannot be operated without a closed vessel.

/// Working with the device

Danger!
- Do not use the device in explosive atmospheres, it is not EX-protected.
- With substances capable of forming an explosive mixture, appropriate safety measures must be applied, e.g. working under a fume hood.
- To avoid body injury and property damage, observe the relevant safety and accident prevention measures when processing hazardous materials.

› Explosion hazard when crushing oxidizable materials!
The mechanical crushing of oxidizable materials (e.g., metals, coal) can lead to the formation of an explosive atmosphere. This is caused by the release of combustible dust and the possible escape of explosive gases. If the concentration of these substances becomes so high that it exceeds the lower explosion limit (LEL), there is an acute risk of explosion.
To avoid this hazard, the following protective measures must be implemented in accordance with the applicable regulations and standards (TRGS 720 / TRGS 722, ATEX Directives 99/92/EC and 2014/34/EU, ISO 80079-36 / ISO 80079-37):
- Carrying out the grinding process as wet grinding to bind the dust.
- Use of suitable ventilation and extraction systems.
- Inerting of plant components, if technically possible.
- Monitoring of the concentration of dust and gases.
- Carrying out the work exclusively under expert supervision.
Compliance with these measures is mandatory to ensure the protection of persons, equipment, and the environment.

Warning!
› Only process samples that will not react dangerously to the extra energy produced through processing. This also applies to any extra energy produced in other ways, e.g. through light irradiation.

Caution!
› Please pay attention to avoiding hand injury when operate the device.
› The vessel may be very hot after operation. Allow it to cool down before remove it from the drive. Use your personal protective equipment.
› Hearing protection must be worn when working with the device in high speed.

Notice!
› The device must be operated on flat surface and must not be moved during operation.
› Covers or parts that can be removed from the device without tools must later be refitted to ensure safe operation. This will prevent the infiltration of foreign objects, liquids and other contaminants.
› The vessel must always be closed during operation. Switch off the device immediately if any material leaks from the vessel. Clean the device after disconnected power plug.
› The feet of the device must be clean and undamaged.
› The devices are designed for short-term operation. The maximum operating time for the **Multidrive basic** is 5 minutes. For the **MultiDrive control**, the maximum operating time is 1 to 30 minutes (depending on the vessel). The device should then be switched off 10 minutes for cooling down.

/// Accessories

› Protect the device and accessories from bumping and impacting.
› Check the device and accessories beforehand for damage each time when you use them. Do not use damaged components.
› Safe operation is only guaranteed with the accessories described in the "Accessories" section.
› Disconnect the power plug before attaching or changing any accessories.

/// Power supply / switching off the device

› The voltage stated on the type plate must correspond to the power voltage.
› The device can only be disconnected from the power supply by pulling out the power plug or the connector plug.
› The device must only be operated with the original power cord set.
› The socket for the power cord must be easily accessible.
› Socket must be earthed (protective ground contact).
› The device does not start up again automatically following a cut in the power supply.

/// Maintenance

› The device must only be opened by trained specialists, even during repair. The device must be unplugged from the power supply before opening. Live parts inside the device may still be live for some time after unplugging from the power supply.

/// Disposal instructions

› The device, accessories and packaging must be disposed of in accordance with local and national regulations.

Intended use

/// Use

The **MultiDrive** device is a batch mill / blender / disperser that can be operated with different vessels. With this device and different vessels, a variety of grinding, blending and dispersing tasks can be performed in the laboratory.

› **Milling:**
In combination with a grinding vessel, the device can be used as a batch mill for impact and cutting milling.

Impact milling: For use with hard, brittle material, dried material or material that is brittle because of cold (for example grain, coffee, etc.). The granularity of the final product is determined by the duration of the grinding, the level to which the container is filled and the physical property of the material being processed.

Cutting milling: For use with soft, fibrous grinding material (for example hay, paper, etc.). In this case as well, the granularity of the final product is determined by the duration of the grinding, the level to which the container is filled and the physical property of the material being processed.

› **Blending:**
In combination with a blending vessel, the device can be used as a batch blender for mixing and wet crushing of free-flowing and liquid media.
It can be widely used in microbiology and food science field.

› **Dispersing:**
In combination with a dispersing vessel, the device can be used as a batch disperser for dispersing and wet crushing of free-flowing and liquid media.

Production of:
Suspension
Emulsion

Intended use: Tabletop device

/// Range of use

Indoor environments similar to that a laboratory of industry area.

The safety of the user cannot be guaranteed:
› If the device is operated with accessories that are not supplied or recommended by the manufacturer.
› If the device is operated improperly or contrary to the manufacture's specifications.
› If the device or the printed circuit board are modified by third parties.

Useful information

The device can be used in a wide range of applications in combination with different vessels.

Note: **Please also observe the operating instructions for the vessels!**

Milling Vessel

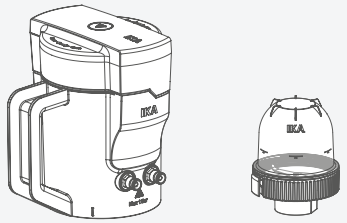

MultiDrive MI 250 / MI 400 / MI 250 T / MI 400 T

MultiDrive MT 150

Blending Vessel

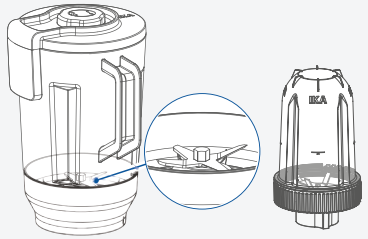

IKA MultiDrive BL 2000 / BL 2000 T

IKA MultiDrive BT 250

Dispersing Vessel

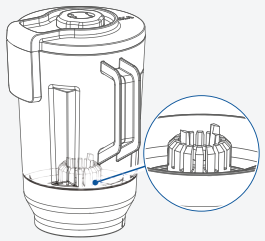

MultiDrive DI 2000 T

Protective cover for MultiDrive MT 150 / BT 250

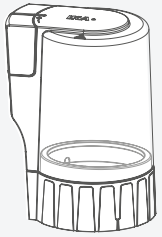

MultiDrive TC 1

/// Milling

In combination with the milling vessel, the device can be used as a batch mill.
The list of grinding materials given below is not complete. It is possible to expand the range of applications further by means of grinding experiments with corresponding grinding procedures and sample preparations, e.g. with cooling.

Impact milling:
The milling vessel with a beater reduces soft, medium hard and brittle materials.
Everything that breaks, is dry, and does not have a high fat content can be ground.

Following is a list of substances that can be ground dry:
Wheat, barley, corn, malt, pectin, roasted coffee, nutshells, bones, ergot, peat, feed materials, spices, resin, potash, seeds, salts, cinders, tablets.
Tough grinding material must be cooled, for example by adding pulverized dry ice to the grinding pot.

Cutting milling:
The milling vessel with the star-shaped cutter (**MultiDrive MI 250.2 / 400.2**) reduces bulky, elastic fibrous and soft materials with high cellulose content.
Mixed goods such as trash must be free of iron and non-iron metals. The feed material must not be too moist or fatty.
Otherwise the material may adhere to the sides of the grinding container.

Following is a list of some materials that can be reduced:
Leaves, fibers, hops, cardboard, paper, hay, plastics, tobacco and roots.

Note: Materials that are not listed in these operating instructions may only be handled with the grinding vessel after confirmed with IKA, especially if there is a risk of explosion (dust explosion due to electrostatic charge).

Working with cooling water:

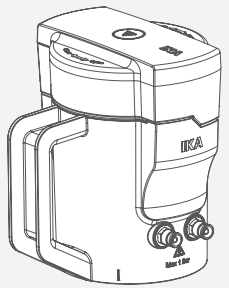

MultiDrive MI 250 /
MI 400 MI 250 T / MI 400 T

Please observe the operating instructions for the milling vessel (MultiDrive MI 250/400 and MultiDrive MI 250/400 T)!

Working with coolants – Dry ice cooling (CO_2):

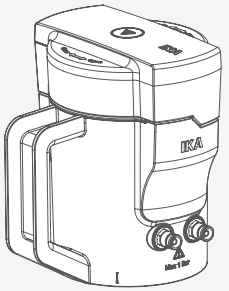

MultiDrive MI 250 /
MI 400 MI 250 T / MI 400 T

MultiDrive MT 150

Please observe the operating instructions for the milling vessel (MultiDrive MI 250/400, MultiDrive MI 250/400 T and MT 150)!

Note: MultiDrive MT 150 was specially designed for the **MultiDrive control** device.
If **MultiDrive MT 150** with **MultiDrive TC 1** is used on **MultiDrive basic** device, the **MultiDrive basic** device does not work and the following message is displayed:

/// Blending

In combination with the blending vessel, the device can be used as a blender.
The blender can be used for many applications. The following list is not complete and can be extended by experiments.

List of substances to be blended:
Ice cream, milk, sauces, vegetables, meat, nut butter, spices.

Note: MultiDrive BT 250 was specially designed for the **MultiDrive control** device.
If **MultiDrive BT 250** with **MultiDrive TC 1** is used on **MultiDrive basic** device, the **MultiDrive basic** device does not work and the following message is displayed:

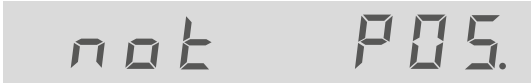

/// Dispersing

In combination with the dispersing vessel, the device can be used as a disperser.
The disperser can be used for handling free-flowing and liquid media in batches.

Unpacking

› Please unpack the device carefully.
› Any damage should be notified immediately to the shipping agent (post office, railway network or logistics company).

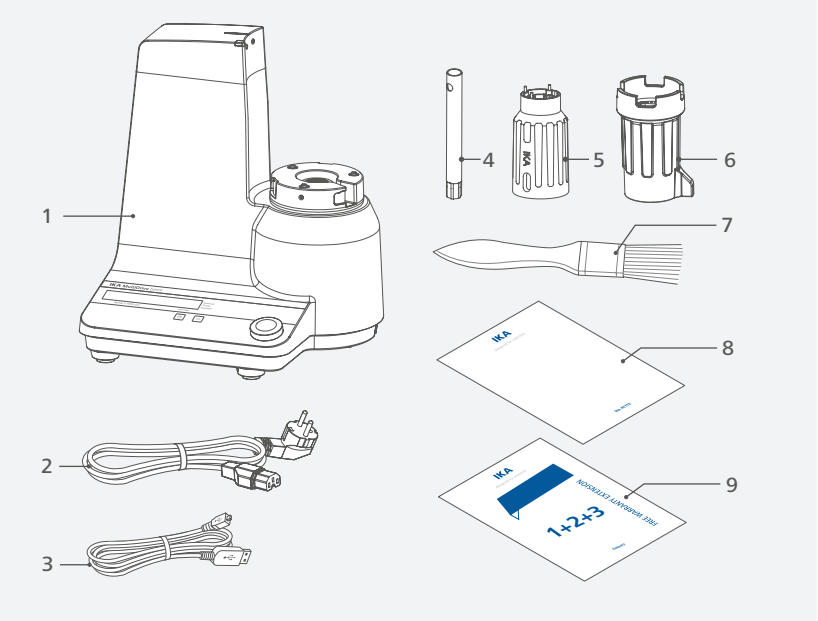

1	**IKA MultiDrive basic** or **IKA MultiDrive control**	5	Disassembly tool **I**
2	Power cord set	6	Disassembly tool **II**
3	USB cable	7	Cleaning brush
4	Socket wrench	8	User guide
		9	Warranty card

Operator panel and display

/// MultiDrive basic

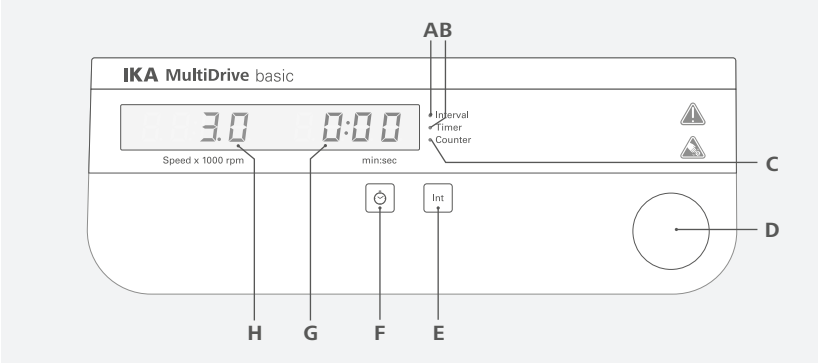

Explanation of the control elements:

A	"Interval" indicator	Indicate the interval function is activated.
B	"Timer" indicator	Indicate the timer function is activated.
C	"Counter" indicator	Indicate the counter function is activated.
D	Control knob (rotating / pressing)	Adjust the speed. Set the timer when the timer setting is enabled. Start / stop running of the device.
E	"Int" button	Activate the interval function.
F	Timer button	Switch between the setting of speed and timer.
G	Time / Counter display	Show the timer / counter value.
H	Speed display	Show the speed value (x 1000 rpm).

/// MultiDrive control

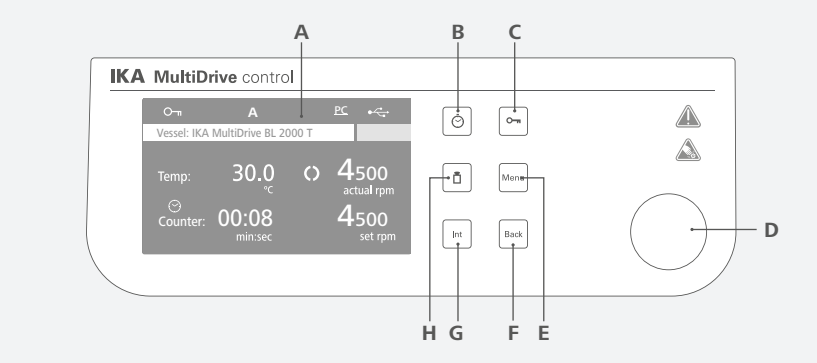

Explanation of the control elements:

A	Display	Screen
B ❶	Timer button	Enter the timer menu.
C	Lock button	Lock / unlock the rotating of the control knob and buttons.
D ❶	Control knob (rotating / pressing)	Adjust the speed. Navigation, selecting and changing the settings in the menu. Start/stop running of the device.
E	"Menu" button	Touch it once: main menu is displayed. Touch it a second time: back to the working screen.
F	"Back" button	Return to the previous menu level.
G ❶	"Int" button	Enter the intermittent mode menu.
H	Weighing button	Enter the weighing menu.

❶ **Note:** Buttons B, E and G only work when a vessel is attached.

Explanation of symbols on the working screen:

Symbol	Designation	Function
	Lock button	Indicate the buttons and rotating of control knob are locked.
A	Operating mode	Indicate the currently selected operating mode (A, B or C).
PC	PC control symbol	Indicate the device is controlled by a PC.
PR	Program control symbol	Indicate the device is in program control mode.
	USB connection symbol	Indicate the device is communicating via USB
	Running symbol	Indicate the device is in running status.
00:10	Intermittent mode	Indicate the device is in interval mode.
	Warning symbol	Indicate that a maintenance interval of the mounted vessel has been exceeded.
VLT	Remaining Usage Time	Indicate the remaining usage life / remaining time of the vessel. Only for **MultiDrive MT 150** and **MultiDrive BT 250**.

Note: The symbols displayed change depending on the status and settings of the device.

Installation

/// Connecting to power

Notice!
The socket used must be earthed (fitted with earth contact).
Observe the ambient conditions (temperature, humidity etc.) listed under “Technical Data”.

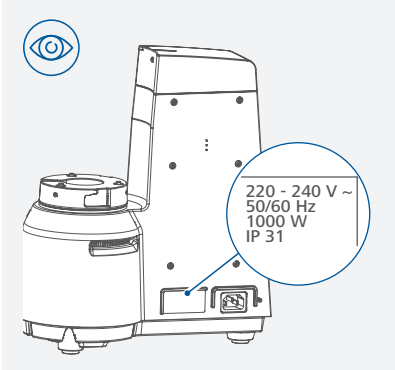

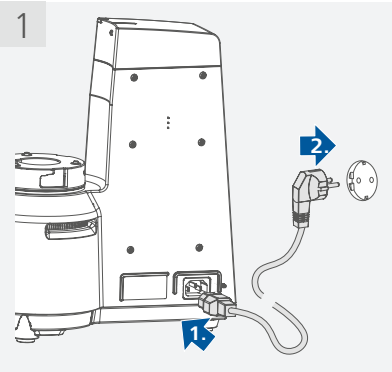

/// Attaching the vessel to the drive unit

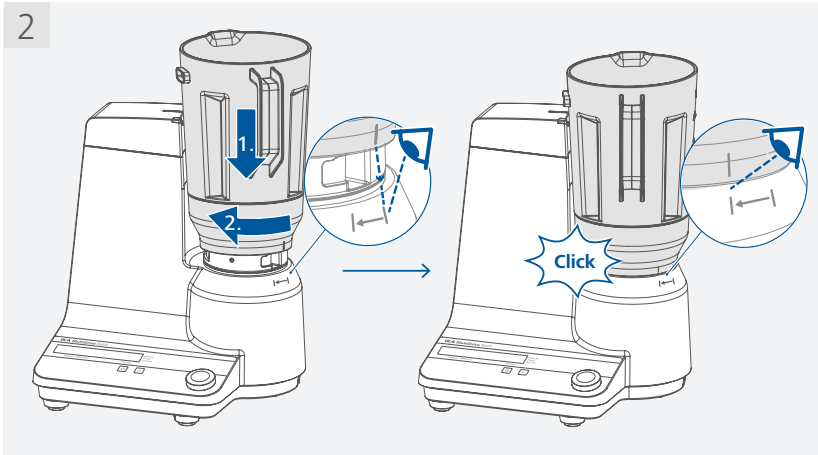

/// Filling the vessel

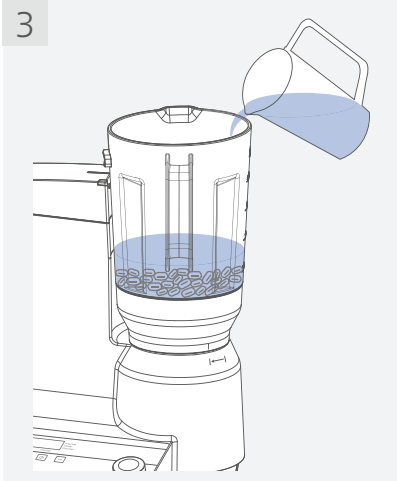

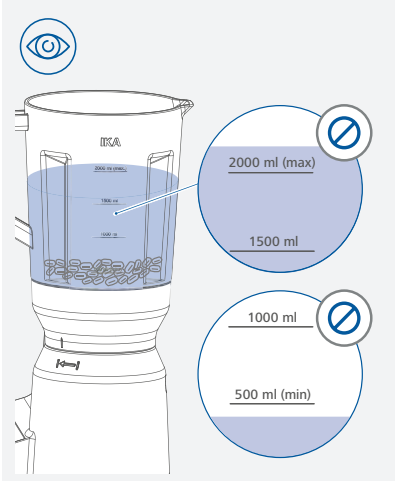

/// Closing the vessel

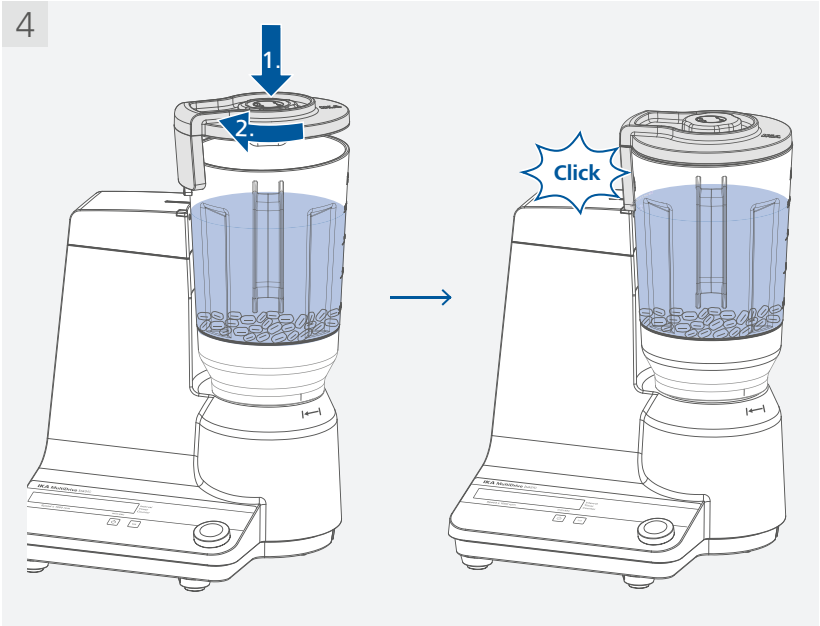

Operation

/// MultiDrive basic

Switching on:

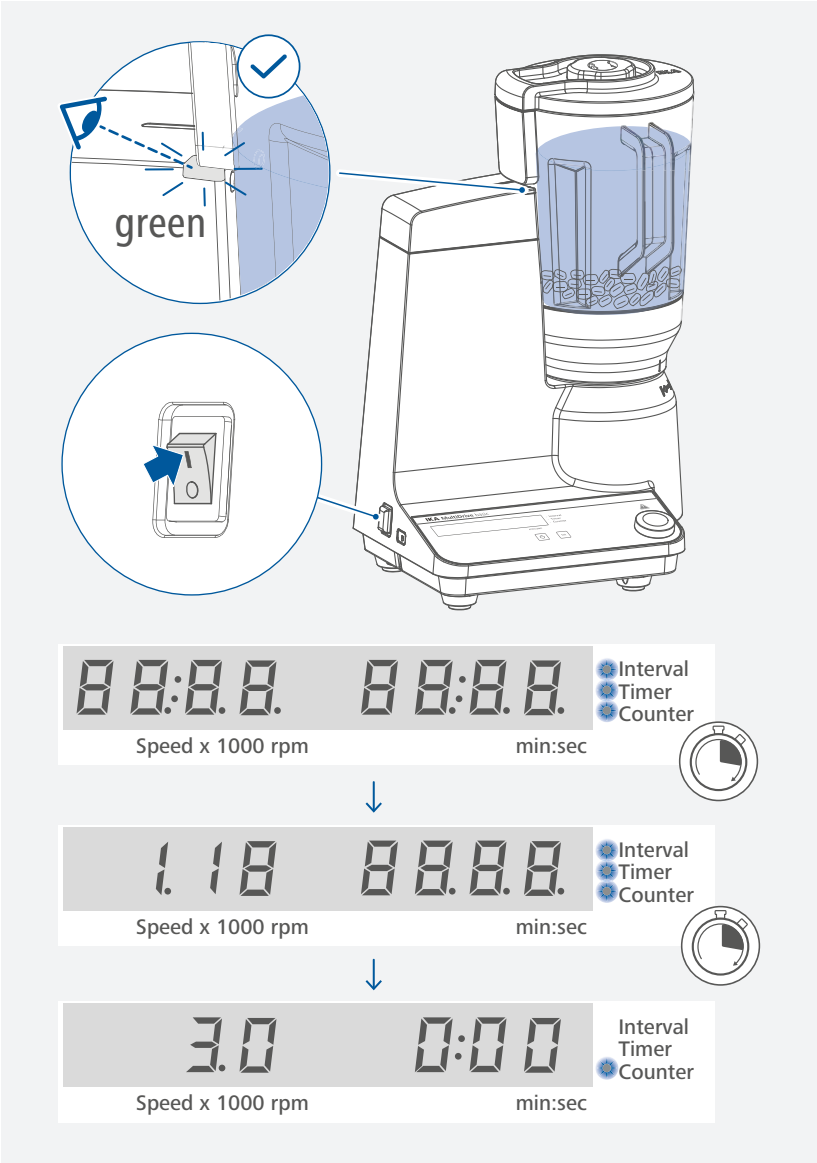

Note: After the cover has been securely closed, the color of the LED signal lamp changes from red to green. The unit is only ready for operation when the LED is green.

Setting the speed:

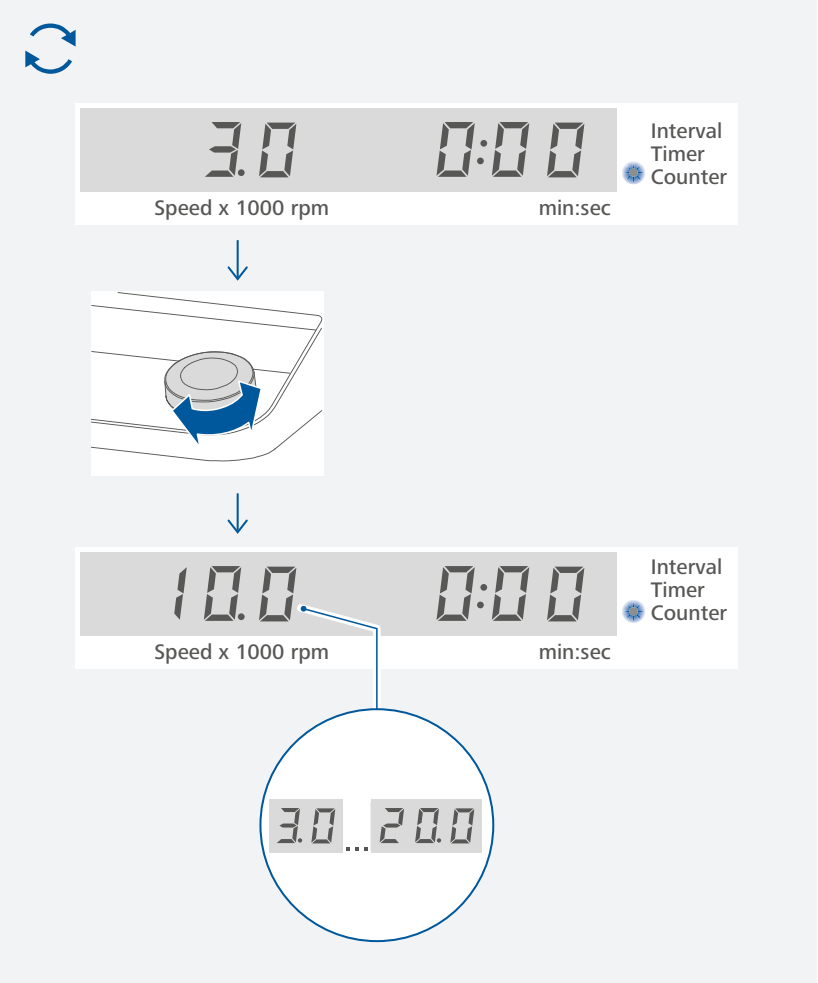

Setting the timer:

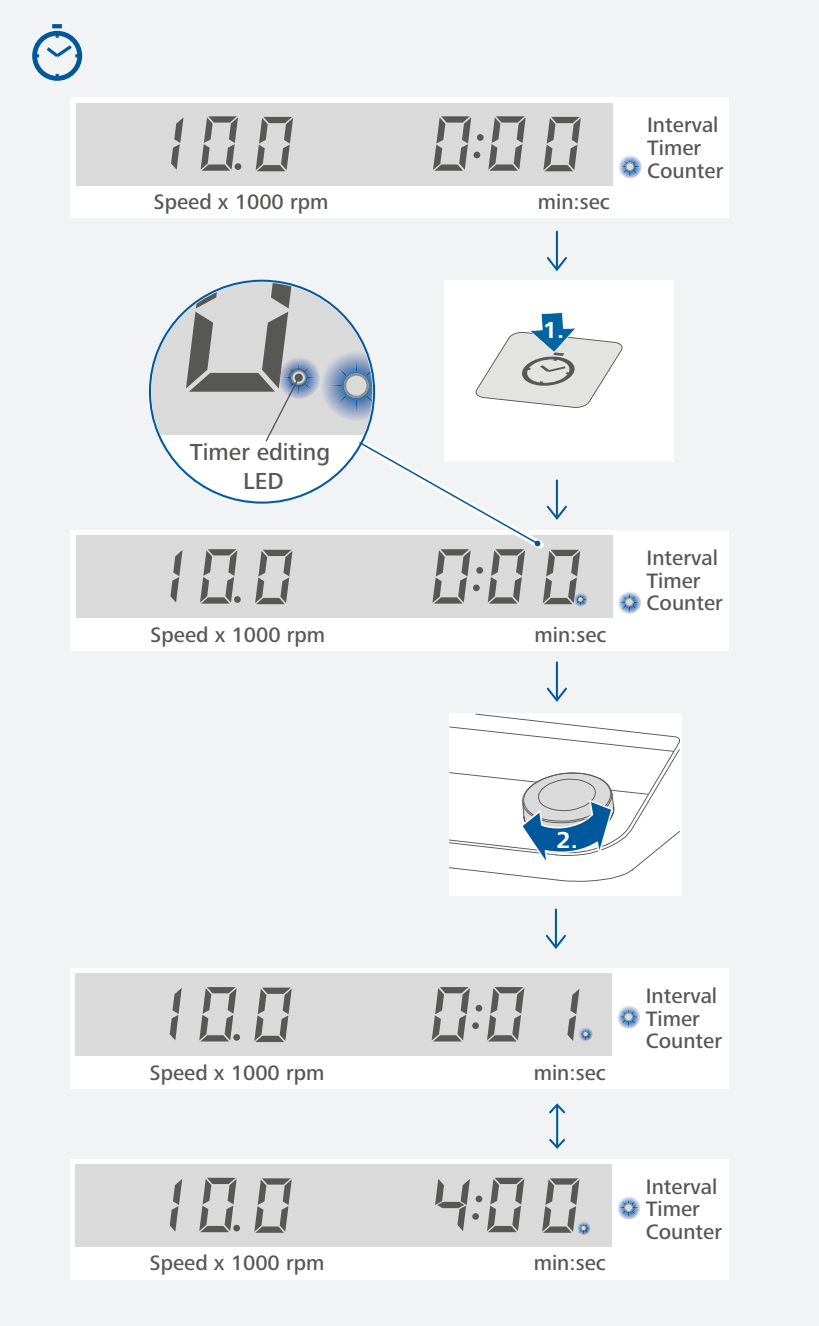

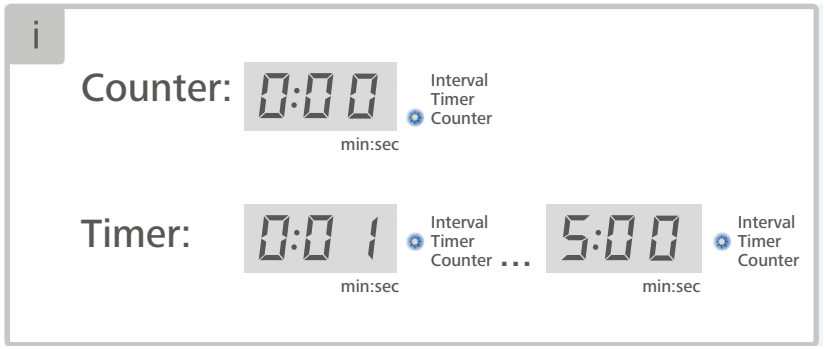

Note: If the counter function is activated, the counter automatically starts to run from 0 seconds to 5 minutes. Then the crushing / blending function of the unit stops.

Activating the interval function:

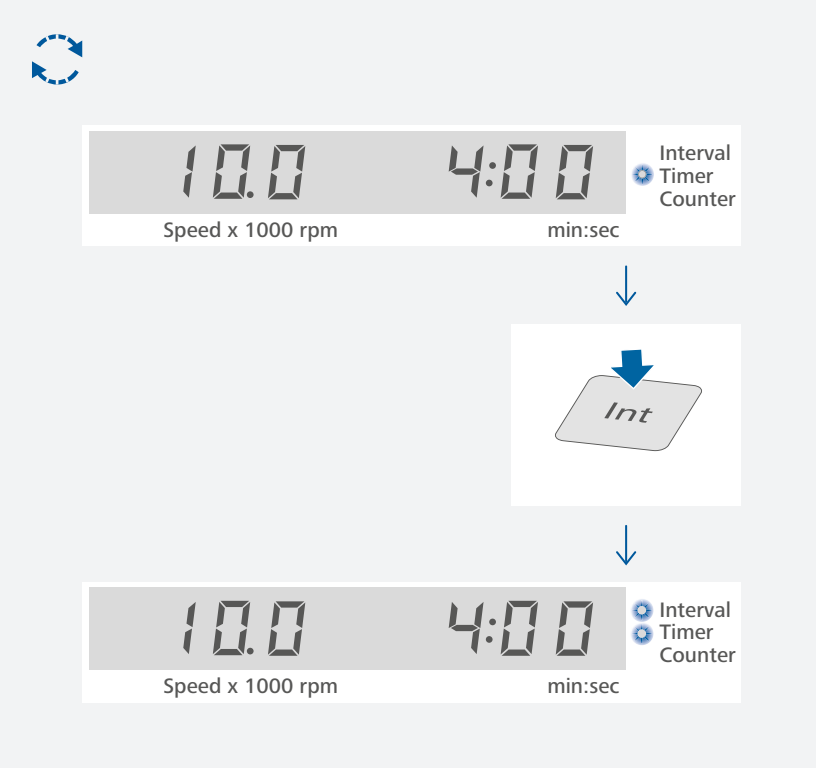

Starting the running:

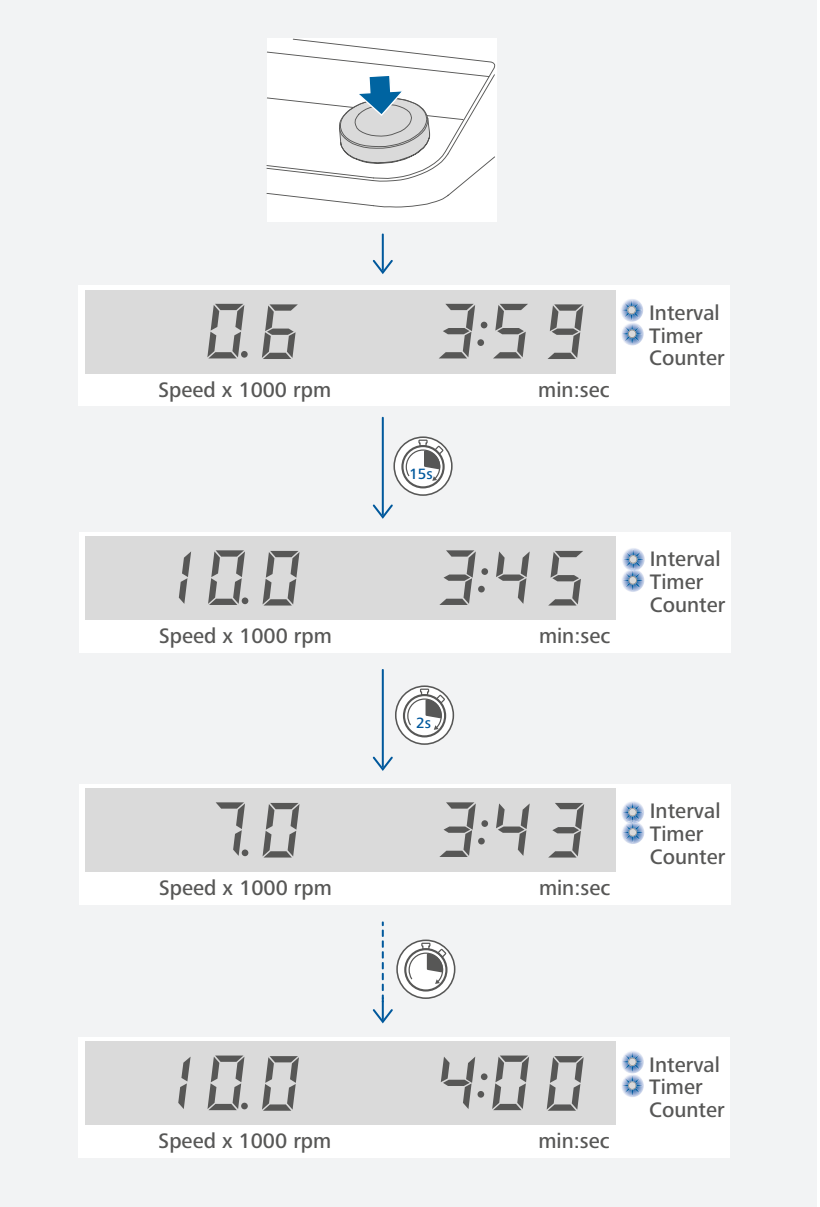

Note: The device is designed for short term operation. The maximum operating time is 5 minutes. After that, it should be switched off for 10 minutes to cool down.
As long as the set speed is not reached, the speed value flashes.

› In interval mode, the device runs for 13 seconds and then stops for 2 seconds.
› In counter mode, the blending or crushing process is switched off after 5 minutes and in timer mode after the set time is over.

Switching on:

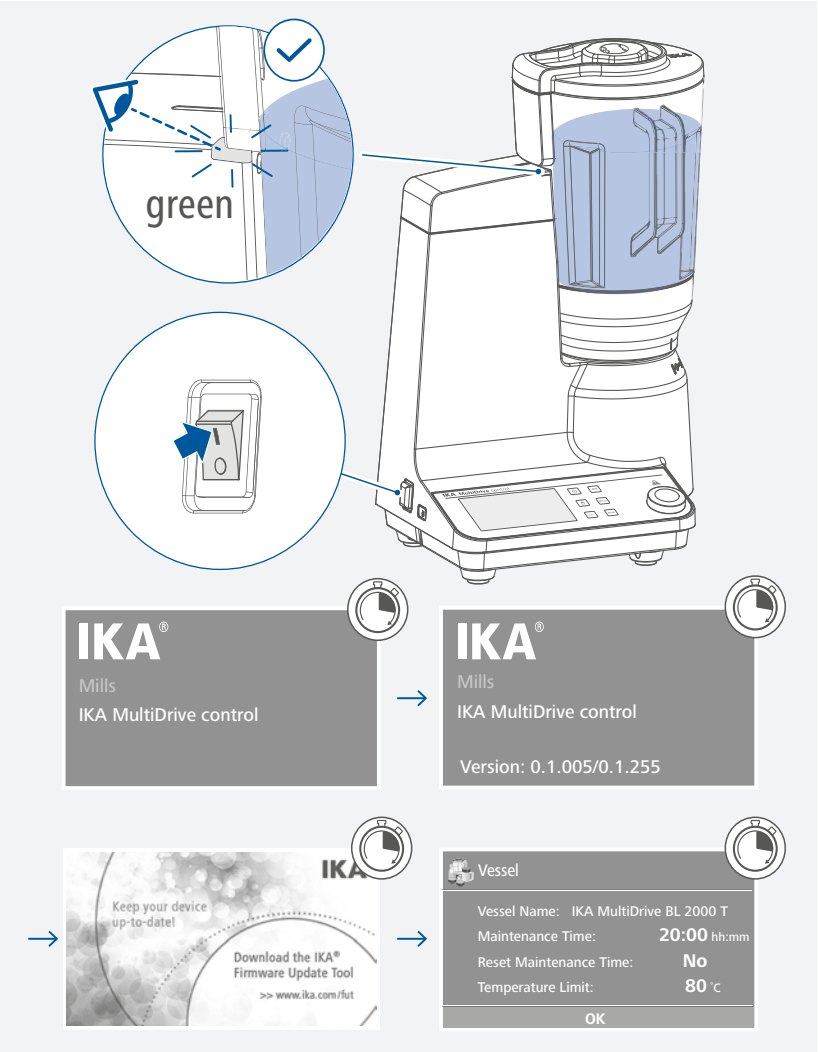

Note: After the cover has been securely closed, the color of the LED signal lamp changes from red to green. The unit is only ready for operation when the LED is green.

Different vessels information:

Confirming the default vessel setting:

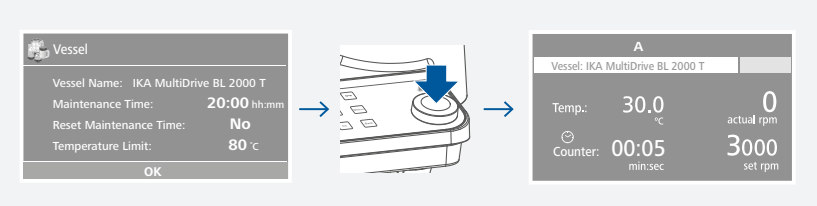

Setting speed and starting the running:

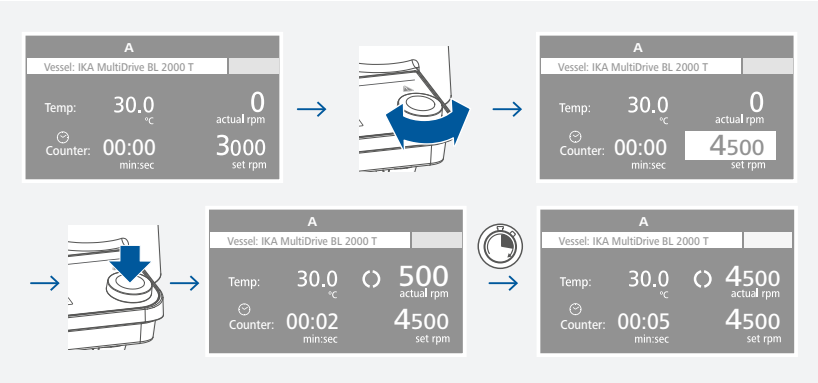

Notice!
The device is designed for short term operation. The maximum operating time is 1 to 30 minutes (depending on vessel). After that, it should be switched off for 10 minutes for cooling down.

Locking / unlocking the operation elements:

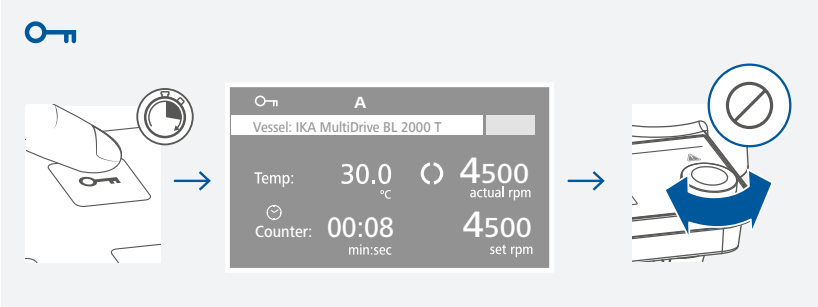

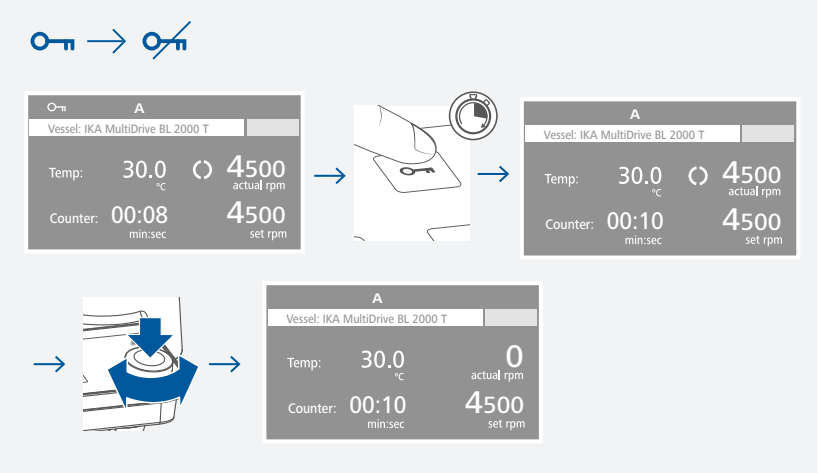

Menu navigation and structure (MultiDrive control)

/// Menu navigation

Attach the desired vessel to the **MultiDrive control** (without the vessel you can not enter the menu structure, as many parameters depend on the vessel).

- Press the "Menu" button.
- Select the desired menu or sub-menu by turning the control knob to left or right and then pressing the control knob.
- Press or turn the control knob again to select the desired menu option and edit the values or settings, or activate / deactivate a function.
- Select "OK" by rotating the control knob and confirm it by pressing the control button for saving the settings. Without saving, you can return to the previous menu or working screen by pressing the "Back" button or "Menu" button.

Note: The selected menu option is highlighted in blue on the screen and can be edited by pressing (at the same time the color change to yellow) on the control knob.

Navigation menu: → Press the "Menu" button and turn the control knob.
← Press the "Back" button or the "Menu" button.

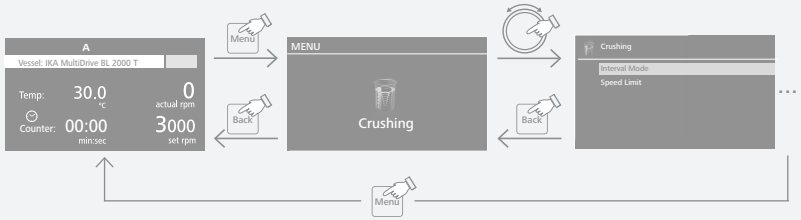

Note: If you press the "Menu" button, the system skips directly back to the working screen.
If you press the "Back" button, the system skips back to the previous display.

/// Menu structure

					Factory setting
Menu	Crushing	Intermittent Mode	Run / Stop		-
			Interval	Run Time	00:10 [mm:ss]
				Stop Time	00:03 [mm:ss]
		Speed Limit			20000 ❹
	Vessel ❶	Vessel Name			depending on vessel
	❷	Vessel Name			depending on vessel
		Maintenance Time			20:00 [hh:mm]
		Reset Maintenance Time			-
		Temperature Limit			depending on vessel
	❸	Vessel Information	Vessel Name		depending on vessel
			Remaining Usage Time		depending on vessel
		Reset Vessel Usage Time			000000
	Timer	Counter			√
		Timer			00:05 [mm:ss]
	Weighing	Measurement			-
		Calibration	2-Point Calibration		-
			3-Punkt Calibration		-
		Reset Calibration			-
	Mode	A			√
		B			-
		C			-
	Program	Program 1			-
		Program 2			-
		...			-
		Program 5			-
	Safety	Password			000
	Settings	Language	English		√
			Deutsch		-
			...		-
		Unit	°C		√
			°F		-
		Display	Background	Black	√
				White	-
			Firmware Update Screen		√
		Sound	Key Tone		-
		Factory Settings			
		Information	Display Version		x.x.xxx
			Logic Version		x.x.xxx
			Temp max.		yes
			Speed max.		20000 rpm

Note:
❶: for **MultiDrive BL 2000 / MI 250 / MI 400**
❷: for **MultiDrive BL 2000 T / DI 2000 T / MI 250 T / MI 400 T**
❸: for **MultiDrive MT 150 / BT 250**
❹: for **MultiDrive DI 2000 T**, the "Speed Limit" value is 15000 rpm.

/// Menu details:

Crushing:

Intermittent Mode:
In the “Run/Stop“ menu option, you can activate or deactivate the interval running function. A check mark (√) indicates that the function is activated.
In the “Interval“ menu option, you can set the “Run Time“ and “Stop Time“ separately.

Speed Limit:
In the “Speed Limit“ menu option, you can set the maximum speed from 3000 to 20000 rpm (for **MultiDrive DI 2000 T**: 3000 to 15000 rpm). The initial setting is the maximum permissible speed of the device. If the speed limit has been changed, then the speed can be adjusted only within the new range.

Vessel:

The device shows different menu information depending on the used vessel.

MultiDrive BL 2000 / MI 250 / 400 vessel is used:

Vessel Name:
The device automatically recognizes the vessel and displays the name accordingly.
Press the control knob on menu option “OK“ to confirm the vessel information.

MultiDrive BL 2000 T / DI 2000 T / MI 250 T / MI 400 T vessel is used:

Vessel Name:
The device automatically recognizes the vessel and displays the name accordingly.

Maintenance Time:
In the “Maintenance Time“ menu option, you can set the vessel maintenance time from 00:01 [hh:mm] to 40:00 [hh:mm]. Once the vessel maintenance time expired, a yellow mark (▲) appears behind the vessel name. After necessary maintenance to the vessel, you can set a new time or reset the maintenance time for next maintenance.
Please also observe the operating instructions for the corresponding vessels.

Reset Maintenance Time:
In the menu option “Reset Maintenance Time“, the currently set maintenance time can be reset with “Yes“ and a new value for the maintenance time can be entered with “No“.

Temperature Limit:
In the “Temperature Limit“ menu option, you can set a temperature from 0 to 80 °C (for **MultiDrive BL 2000 T** / **DI 2000 T**) and 120 °C (for **MultiDrive MI 250 T** / **MI 400 T**). When the set value is reached, the device will stop the blending or crushing process.
When you finish the settings, press “OK“ with the control knob to confirm the vessel information.

MultiDrive MT 150 / BT 250 is used:

Vessel Information:
In the "Vessel Information" menu option the "Vessel Name" and "Remaining Usage Time" is automatically displayed according to the detection of the vessel.

Reset Vessel Usage Time:
When the vessel usage life time has expired, the VLT value becomes negative and a warning message (▲) appears on the screen. The vessel must then be replaced with a new one or the currently used seal in the vessel must be replaced.
After replacing the seal, a new activation code for the vessel must also be entered in the menu option "Reset Vessel Usage Time". Each spare seal has an activation code.

Timer:

Counter:
If the "Counter" menu option is activated, a check mark (√) indicates that the function is activated. The counter automatically starts to run from 00:00 [mm:ss] seconds to the maximum value. When the maximum value is reached, the unit stops the blending or crushing process.

Timer:
If the "Timer" menu option is activated, a check mark (√) indicates that the function is activated. Depending on the vessels, the value of the "Timer" can be set from 00:05 [mm:ss] up to the maximum value of the.
The unit stops automatically after the set time has elapsed and the set time appears on the display.

Note: You can stop the processing before expiry of the set timer. In this case, the countdown of the timer is interrupted.

The maximum (Timer / Counter) value for respective vessel:

Vessel Designation	Max. value [mm:ss]
MultiDrive BL 2000 / MI 250 / MI 400	00:05 ... 05:00
MultiDrive BL 2000 T / DI 2000 T **MultiDrive MI 250 T / MI 400 T**	00:05 ... 30:00
MultiDrive MT 150 / BT 250	00:05 ... 01:00

Weighing:

Measurement:
In the "Measurement" menu option, you can weigh sample when the device is at standstill. Touch the weighing button (H) for taring. Press control knob on "OK" to finish the weighing.

Calibration:
In the "Calibration" menu option, you can select "2-point calibration" or "3-point calibration". The calibration can be proceeded as below:

› Input the weight value for calibration by pressing / rotating the control knob (D).
› Confirm the weight value by pressing the control knob (D) on "OK".
› Place the standard reference weight on the top of the device as instructed by the screen. Wait until the device indicates that the calibration process has been completed.
› Remove the reference weight as instructed on the screen.
› Press the control knob on "OK" to finish the first point calibration.
› The calibration of the other points are performed in the same way.

When 2-point calibration is selected, we recommend to perform calibration to 200 g and 1000 g.
When 3-point calibration is selected, we recommend to perform calibration to 200 g, 1000 g and 2000 g.

Once the calibration process has been completed successfully, the weighing module is ready for use. Regularly re-calibrate the device.

Reset Calibration:
In the "Reset Calibration" menu option, you can reset weighing function to factory calibration.

Mode:

Operating mode A:
After switch on / power failure, restore the set speed to minimum speed (3000 rpm).

Operating mode B:
After switch on / power failure, restore the set speed based on previous settings.

Operating mode C:
Set values (set in A or B) cannot be changed.
After power on / power failure, restore the set speed based on previous settings.

Program:

In menu option "Program", you can create 5 user-defined "speed-time" profiles.
In addition, you can define the intermittent mode is activated or not in the program. If the intermittent mode is activated, the run time/stop time value from the "Intermittent Mode" will be taken.

Note: If you need to activate the intermittent mode in one segment of a program, you must set the "Run time / Stop time" in menu option "Interval", and activate the "Run / Stop" function in menu option "Intermittent Mode" (see section "Crushing").

Once a program has been selected, the following options are available:

Start: Start the selected program upon request.
When you start the selected program, you are required to set the loop count by rotating the control knob. Press "OK" to start the program control. Confirm the following message if you want to start the program control, or press the "Menu" or "Back" button to end the process.

Edit: Edit the selected program parameters.
Edit the selected program by pressing on the "Edit" button with the control knob.
In the editing program, you can define up to 10 program segments. The selected program segment is highlighted in blue color.
Then, you can "Edit", "Delete", "Insert" or "Save" the selected program segment in this program by rotating/pressing on the control knob.

When editing a parameter (Speed / Time / Intermittent Mode), press the control knob on the selected parameter. The highlighted cursor changed into yellow color indicates that parameter can be edited by rotating the control knob.
If the "Back" key is pressed after editing, a reminding appears and ask if you want to save the change. When you edit the program time for at least one segment, a symbol ( ) for respective program will appear.

Delete: Deletes the selected program.
If a selected program is deleted by pressing on menu option "Delete" with the control knob, all the program parameters will be emptied. The symbol ( ) disappears.

Note: Please note that the maximum program run time can not exceed the permissible operating time of the corresponding vessel used (e.g. 5 minutes for the **Multidrive MI 250**, more values see table under "Timer"). Similarly, the speed must not exceed the speed limit set in the "Crushing" menu.
If the parameters in the corresponding program are not within the limits (operating time of the vessel and speed), the program cannot start. Check the speed settings in the program or in the "Crushing" menu, as well as the program run time and the maximum operating time of the vessel used. Adjust the settings accordingly before starting the program.

Safety:

Password:
In the "Password" menu option, you can lock the menu settings by a 3-digit password (factory setting: 000).
If you forgot your password, please contact our service department.

Setting:

Languages:
In the "Languages" menu option, you can select the desired language by turning and pressing the control knob (D). A check mark (√) indicates the language that is set for the system.

Units:
In the "Units" menu option, you can select the desired unit (°C or °F) for the temperature. A check mark (√) indicates the unit that is set for the system.

Display:
In the "Background" menu option you select black or white color for the working screen.
In the "Firmware Update Info" menu option, you can activate or deactivate the "Firmware Update Info" screen at the starting of the device. A check mark (√) shows that the menu option is activated.

Sound:
In the "Sound" menu option, you can activate or deactivate the key touch sound. A check mark (√) shows that the menu option is activated.

Factory Settings:
Select the "Factory settings" option by turning and pressing the control knob. The system requests confirmation to restore the factory settings. Press "OK" button to reset all the system settings to the original standard values set at dispatch from the factory (see "Menu structure").

Information:
The "Information" option offers you an overview of the most important system settings of the device.

Error message and troubleshooting

/// Error message

Any malfunctions during operation will be identified by an error message on the display.

Proceed as follows in such cases:
› Turn off the device by using the power switch.
› Carry out corrective measures.
› Restart the device.

E 3

Error message	› Inside temperature is too high.
Effect	› Motor off
Solutions	› Switch off the device and allow it to cool down. › Restart the instrument.

E 4

Error message	› Motor blockage or overload.
Effect	› Motor off
Solutions	› Switch off the device › Decrease the speed setting or the load.

If the actions described fails to resolve the fault or another error code is displayed then take one of the following steps:
› Contact the service department.
› Send the device for repair, including a short description of the fault.

/// Warning message (only for **MultiDrive control**)

Warning message	› ▲ (Vessel maintenance time exceeded).
Solutions	› Perform maintenance, and then reset the maintenance time for the container.

Warning message	› Temperature of the medium over the set limit.
	› Motor off
Solutions	› Reset a higher temperature limit. › Let the media cool down.

Maintenance and cleaning

The device is maintenance-free. It is only subject to the natural wear and tear of components and their statistical failure rate.

/// Cleaning

For cleaning disconnect the mains plug!
Use only cleaning agents which have been approved by IKA to clean the devices:
These are: water (containing surfactant) and isopropyl alcohol.

› Wear protective gloves during cleaning the devices.
› Electrical devices may not be placed in the cleansing agent for the purpose of cleaning.
› Do not allow moisture to get into the device when cleaning.
› Before using another than the recommended method for cleaning or decontamination, the user must ascertain with that this method does not destroy the device.

Danger!
Pay attention to the ventilation slot when cleaning the device. Never spray water into the ventilation slot!

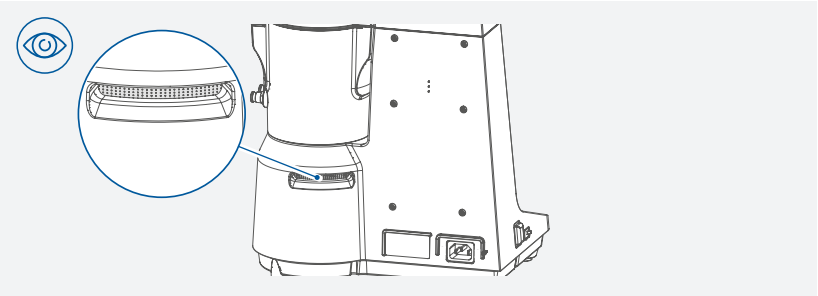

Notice!
Check the damper regularly! If there is heavy accumulation of dirt, please take it out for cleaning.
After cleaning, make sure the damper is put back correctly.
If unusual noises occur, check and replace the damper if necessary.

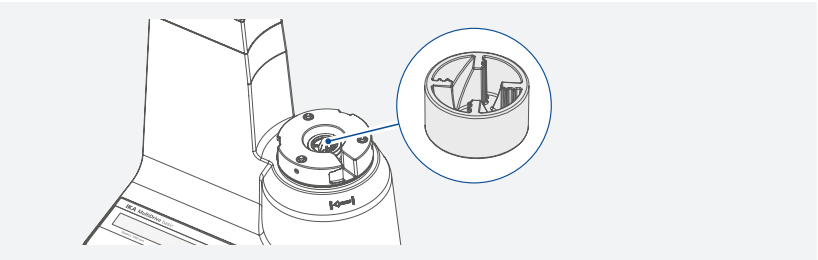

/// Ordering spare parts

When ordering spare parts, please indicate:
› Device type.
› Serial number, see type plate
› Item and designation of the spare part, see: **www.ika.com**, spare parts diagram and spare parts list.
› Software version (Briefly visible in the display when the device is switched on).

/// Repairs

Please send in device for repair only after it has been cleaned and is free from any materials which may constitute a health hazard.
For repair, please request the "Decontamination Certificate" from **IKA**, or download printout of it from the **IKA** website **www.ika.com**.
If you require servicing, return the device in its original packaging. Storage packaging is not sufficient. Please also use suitable transport packaging.

Interfaces and outputs

The device can be connected to a PC and operated with the laboratory software labworld*soft*® through USB interface.

Note: Please comply with the system requirements together with the operating instructions and help section included with the software.

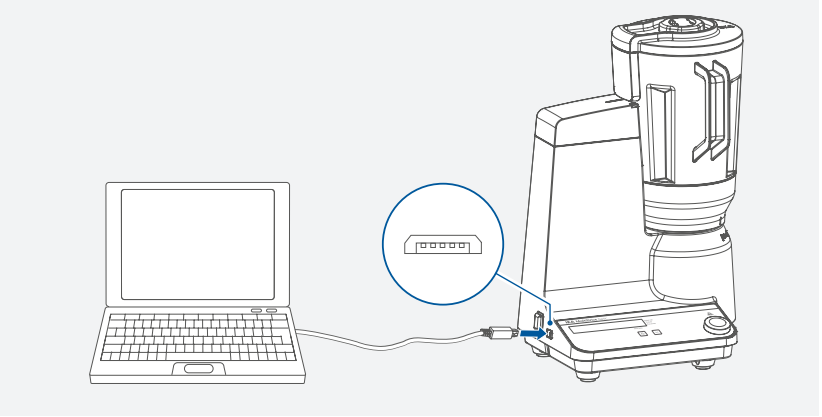

/// USB interface

The Universal Serial Bus (USB) is a serial bus for connecting the device to the PC. Equipped with USB devices can be connected to a PC during operation (hot plugging).
Connected devices and their properties are automatically recognized.
Use the USB interface in conjunction with labworldsoft® for operation in "Remote" mode and also to update the firmware.

/// USB device drivers

First, download the latest driver for IKA devices with USB interface from:
www.ika.com/ika/lws/download/usb-driver.zip.
Install the driver by running the setup file. Connect the IKA device through the USB data cable to the PC. The data communication runs through a virtual COM port.

/// Command syntax and format

The following applies to the command set:

- Commands are generally sent from the computer (Master) to the lab device (Slave).
- The lab device only sends at the computer's request. Even fault indications cannot be sent spontaneously from the lab device to the computer (automation system).
- Commands are transmitted in capital letters.
- Commands and parameters including successive parameters are separated by at least one space (Code: hex 0x20).
- Each individual command (incl. parameters and data) and each response are terminated with Blank CR LF (Code: hex 0x0d hex 0x0A) and have a maximum length of 80 characters.
- The decimal separator in a number is a dot (Code: hex 0x2E).

The above details correspond as far as possible to the recommendations of the NAMUR working party (NAMUR recommendations for the design of electrical plug connections for analogue and digital signal transmission on individual items of laboratory control equipment, rev. 1.1).
The NAMUR commands and the additional specific IKA commands serve only as low level commands for communication between the device and the PC. With a suitable terminal or communications program these commands can be transmitted directly to the device. The IKA software labworld*soft*®, provides a convenient tool for controlling the device and collecting data under MS Windows, and includes graphical entry features, for motor speed ramps for example.

Commands	Function
IN_NAME	Read the device name
IN_PV_4	Read current speed value
IN_SP_4	Read rate speed value
OUT_SP_4 xxx	Change the speed value to xxx
START_4	Start the motor
STOP_4	Stop the motor
RESET	Switch to normal operation mode

Accessories

		MultiDrive basic	MultiDrive control
MultiDrive BL 2000	Blending vessel	√	√
MultiDrive BL 2000 T	Blending vessel (with temperature sensor)	- / ❶	√
MultiDrive DI 2000 T	Dispersing vessel (with temperature sensor)	- / ❶	√
MultiDrive MI 250	Milling vessel	√	√
MultiDrive MI 400	Milling vessel	√	√
MultiDrive MI 250 T	Milling vessel (with temperature sensor)	- / ❶	√
MultiDrive MI 400 T	Milling vessel (with temperature sensor)	- / ❶	√
MultiDrive MT 150	Milling vessel	-	√
MultiDrive BT 250	Blending vessel	-	√
MultiDrive TC 1 ❷	Protective cover	-	√

Note:

❶ Since the functionality of the temperature sensor is not available with this **MultiDrive basic** device, the temperature sensor integrated in the vessel can be damaged!

❷ **MultiDrive MT 150 / BT 250** vessels can only be operated together with **MultiDrive TC 1**.

See more accessories on **www.ika.com**.

Technical data

		MultiDrive basic	MultiDrive control
General data			
Voltage	VAC	220 ... 240 ± 10 % 100 ... 120 ± 10 %	
Frequency	Hz	50 / 60	
Motor rating input	W	1000	
Motor rating output	W	800	
Interface		USB	
Permissible ambient temperature	°C	+5 ... +40	
Permissible relative humidity	%	80	
IP code according to EN 60529		IP 31	
Safety class		I	
Overvoltage category		II	
Pollution degree		2	
Dimensions (W × D × H)	mm	300 × 250 × 350	
Weight	kg	8.5	
Operation at a terrestrial altitude	m	max. 2000	
Blending and crushing function			
Process type		Batch	
Short time operation	min.	Max. 5 min. ON / Min. 10 min. OFF	Max. 30 min. ON / min. 10 min. OFF (depending on vessel)
Speed range	rpm	3000 ... 20000	
Speed display		LED	TFT LCD
Speed deviation		± 5 % of current speed	
Speed setting		knob	
Speed setting resolution	rpm	0.1 (x1000)	100
Interval function			
Run time setting range		13 seconds (fixed)	10 seconds ... 1 minute
Stop time setting range		2 seconds (fixed)	3 seconds ... 15 seconds
Vessel detection function		Yes	
Timer function			
Min. / Max. Timer value		1 seconds ... 5 minutes	5 seconds ... 30 minutes (depending on vessel)
Timer display		LED	TFT LCD
Timer setting		Button / knob	
Timer setting resolution	sec.	1	
Weighing function			
Weighing range	g	-	5 ... 4000
Weighing resolution	g	-	0.3 % of current weight +2
Max. weighing load	g		4000
Integrated temperature sensor / RFID reader		No	Yes

		MultiDrive basic	MultiDrive control
Temperature measuring / monitoring		No	Yes
Temperature display		-	Yes
Temperature measurement resolution	K	-	0.1
Temperature measurement accuracy	K	-	± 1
Min. / Max. temperature limit	°C	-	-50 .... + 120
Maintenance time monitoring		No	Yes
Program contro (PR) function		No	Yes

Subject to technical changes!

Warranty

In accordance with IKA warranty conditions, the warranty period is 24 months. For claims under the warranty please contact your local dealer. You may also send the machine direct to our factory, enclosing the delivery invoice and giving reasons for the claim. You will be liable for freight costs. The warranty does not cover worn out parts, nor does it apply to faults resulting from improper use, insufficient care or maintenance not carried out in accordance with the instructions in this operating manual.

IKA

designed for scientists

IKA-Werke GmbH & Co. KG
Janke & Kunkel-Straße 10, 79219 Staufen, Germany
Phone: +49 7633 831-0, Fax: +49 7633 831-98
eMail: sales@ika.de

USA
IKA Works, Inc.
Phone: +1 910 452-7059
sales@ika.net

KOREA
IKA Korea Ltd.
Phone: +82 2 2136 6800
sales-lab@ika.kr

BRASIL
IKA Brasil
Phone: +55 19 3772-9600
sales@ika.net.br

MALAYSIA
IKA Works (Asia) Sdn Bhd
Phone: +60 3 6099-5666
sales.lab@ika.my

CHINA
IKA Works Guangzhou
Phone: +86 20 8222 6771
info@ika.cn

POLAND
IKA Poland Sp. z o.o.
Phone: +48 22 201 99 79
sales.poland@ika.com

JAPAN
IKA Japan K.K.
Phone: +81 6 6730 6781
info_japan@ika.ne.jp

INDIA
IKA India Private Limited
Phone: +91 80 26253 900
info@ika.in

UNITED KINGDOM
IKA England LTD.
Phone: +44 1865 986 162
sales.england@ika.com

VIETNAM
IKA Vietnam Company Limited
Phone: +84 28 38202142
sales.lab-vietnam@ika.com

THAILAND
IKA Works (Thailand) Co. Ltd.
Phone: +66 2059 4690
sales.lab-thailand@ika.com

TURKEY
IKA Turkey A.S
Phone: +90 216 394 43 43
sales.turkey@ika.com

KENYA
IKA Works Kenya Ltd.
Phone: +254 112 323 745
sales.kenya@ika.com

UGANDA
IKA Works Kampala Limited
Phone: +254 112 323 745
sales.uganda@ika.com

SPAIN
IKA Works Spain, S. L.
Barcelona
sales.spain@ika.com

Discover and order the fascinating products of IKA online:
www.ika.com

www.ika.com

IKAworldwide // #lookattheblue

Technical specifications may be changed without prior notice.

20000024899c_EN_IKA MultiDrive_112025_web